1. ALL RESISTANCE VALUES ARE IN OHMS, 0.1 WATT +/- 5%.
2. ALL CAPACITANCE VALUES ARE IN MICROFARADS.
3. ALL CRYSTALS & OSCILLATOR VALUES ARE IN HERTZ.

IMG5 17" REV E
11/01/05

REV	ZONE	ECN	DESCRIPTION OF CHANGE	CK APPD / DATE	ENG APPD / DATE
E		408158	PRODUCTION RELEASED	11/01/05	?

PDF	CSA	CONTENTS	SYNC MASTER	DATE
2	2	System Block Diagram	FINO-DD	06/20/2005
3	4	Power Block Diagram	FINO-PC	06/20/2005
4	5	Table Items	FINO-M23	08/26/2005
5	6	FUNC TEST 1 OF 2	FINO-ME	06/20/2005
6	7	Power Conn / Alias	M23-PC	06/20/2005
7	8	Signal Alias	FINO-DD	06/20/2005
8	9	FUNC TEST 2 OF 2	FINO-ME	06/20/2005
9	11	1.8V Vreg	M23-PC	06/20/2005
10	12	1.5V Vreg	FINO-PC	06/20/2005
11	13	1.2V Vreg	FINO-PC	06/20/2005
12	15	2.5V Vreg	FINO-PC	06/20/2005
13	16	5V & 3.3V Fets	FINO-PC	06/20/2005
14	17	Vesta Core / Misc	FINO-DC	06/20/2005
15	19	KODIAK CORE & BYPASS	Q63	08/01/2005
16	20	KODIAK & SHASTA MISC	FINO-ME	06/20/2005
17	23	Shasta Core Power	Q63	08/01/2005
18	24	Shasta Serial / Misc	FINO-ME	06/20/2005
19	25	PULSAR2 POWER	Q63	08/01/2005
20	26	PULSAR2 CLOCKS	FINO-ME	06/20/2005
21	27	Pulsar Aliases	FINO-ME	06/20/2005
22	28	System Management Unit	Q63	08/01/2005
23	29	SMU SUPPLEMENTAL (2)	FINO-HS	06/20/2005
24	30	SMU SUPPLEMENTAL (3)	FINO-HS	06/20/2005
25	31	SMU SUPPLEMENTAL (4)	FINO-HS	06/20/2005
26	32	Fan 0, 1 & System Temp	FINO-HS	06/20/2005
27	33	Fan 2 & HD Temp	FINO-HS	06/20/2005
28	39	I2C Connections	FINO-ME	06/20/2005
29	41	KODIAK EI PWR & CAPS	Q63	08/01/2005
30	42	KODIAK EI A	Q63	08/01/2005
31	43	CPU EI AND IO	FINO-HS	06/20/2005
32	44	KODIAK EI B	Q63	08/01/2005
33	47	CPU STRAPS	FINO-HS	06/20/2005
34	48	CPU POWER AND BYPASS	FINO-HS	06/20/2005
35	49	PROC DECOUPLING	FINO-HS	06/20/2005
36	50	CPU VCORE VREG	M23-HS	06/20/2005
37	52	CPU VCORE MORE BYPASS	FINO-HS	06/20/2005
38	54	CPU AVDD VREG	FINO-HS	06/20/2005
39	55	T,V,I SENSORS	FINO-HS	06/20/2005
40	56	CPU ALIASES & MISC	FINO-HS	06/20/2005
41	58	KODIAC NBMEM PWR & CAPS	Q63	08/01/2005
42	59	Kodiak Memory Dq/Ctl	FINO-DS	06/20/2005
43	61	Parallel Term	FINO-DS	06/20/2005
44	62	Main Memory Clock Buffer	FINO-DS	06/20/2005
45	63	MEMORY ADDR BRANCHING	FINO-DS	06/20/2005
46	67	Memory Dimm A	FINO-DS	06/20/2005
47	68	MLB Mem Series Term	FINO-DS	06/20/2005
48	69	On-Board DDR SDRAM	FINO-DS	06/20/2005
49	70	On-Board DDR SDRAM	FINO-DS	06/20/2005
50	82	KODIAK PCI-E X16	Q63	08/01/2005
51	84	GPU PCIe	M23-DD	06/20/2005
52	85	Graphics Vregs	M23-DD	06/20/2005
53	86	GPU Core Power	FINO-DD	06/20/2005
54	87	GPU Frame Buffer	FINO-DD	06/20/2005
55	88	FB Series Termination	FINO-DD	06/20/2005
56	89	GPU GDDR SDRAM A	FINO-DD	06/20/2005
57	90	GPU GDDR SDRAM B	FINO-DD	06/20/2005
58	92	GPU Straps	FINO-DD	06/20/2005
59	93	GPU DVI & DACs	FINO-DD	06/20/2005
60	96	TMDS/Inverter/ExtVGA	M23-DD	06/20/2005
61	97	KODIAK PCI-E CONST	FINO-DD	06/20/2005
62	98	KODIAK HT16	Q63	08/01/2005
63	101	HT ALIASES	FINO-ME	06/20/2005
64	103	Shasta HyperTransport	Q63	08/01/2005
65	119	Shasta PCI Interface	Q63	08/01/2005
66	120	PCI SERIES TERMINATION	FINO-MW	06/20/2005
67	121	AIRPORT & BLUETOOTH	FINO-MW	06/20/2005
68	122	USB 2.0 PCI Interface	Q63	08/01/2005
69	125	BootROM	Q63	08/01/2005
70	127	Shasta Disk	M23-DC	06/20/2005
71	129	Disk Connectors	M23-DC	06/20/2005
72	130	ENET SERIES TERM	FINO-DC	06/20/2005
73	131	Shasta Ethernet	Q63	08/01/2005
74	132	Vesta Ethernet PHY	Q63	08/01/2005
75	136	ETHERNET CONNECTOR	FINO-DC	06/20/2005
76	138	Shasta FireWire	Q63	08/01/2005
77	139	Vesta FireWire PHY	Q63	08/01/2005
78	140	FIREWIRE CONNECTORS	FINO-DC	06/20/2005
79	142	USB Host Interfaces	FINO-PC	07/05/2005
80	143	USB Device Interfaces	FINO-PC	06/20/2005
81	144	Flash Media Ctrl	FINO-PC	06/20/2005
82	145	Flash Connector	FINO-PC	06/20/2005
83	147	AUDIO: CODEC	FINO-SO	10/07/2005
84	148	AUDIO: LINE INPUT AMP	FINO-SO	10/07/2005
85	150	AUDIO: LINE OUT AMP	FINO-SO	10/07/2005
86	152	AUDIO: SPEAKER AMP	FINO-SO	10/07/2005
87	153	AUDIO: CONNECTORS	FINO-SO	10/07/2005
88	154	AUDIO: POWER SUPPLIES	FINO-SO	10/07/2005

DIMENSIONS ARE IN MILLIMETERS
XX ±
X.XX ±
X.XXX ±
ANGLES ±
DO NOT SCALE DRAWING

THIRD ANGLE PROJECTION

METRIC

DRAFTER / DESIGN CK / ENG APPD / MFG APPD / QA APPD / DESIGNER / RELEASE / SCALE NONE

MATERIAL/FINISH NOTED AS APPLICABLE

SIZE D

Apple Computer Inc.

NOTICE OF PROPRIETARY PROPERTY
THE INFORMATION CONTAINED HEREIN IS THE PROPRIETARY PROPERTY OF APPLE COMPUTER, INC. THE POSSESSOR AGREES TO THE FOLLOWING
I TO MAINTAIN THE DOCUMENT IN CONFIDENCE
II NOT TO REPRODUCE OR COPY IT
III NOT TO REVEAL OR PUBLISH IN WHOLE OR PART

TITLE SCH,MLB,IMG5,17

DRAWING NUMBER 051-6790 REV. E

SHT 1 OF 154

www.laptop-schematics.com

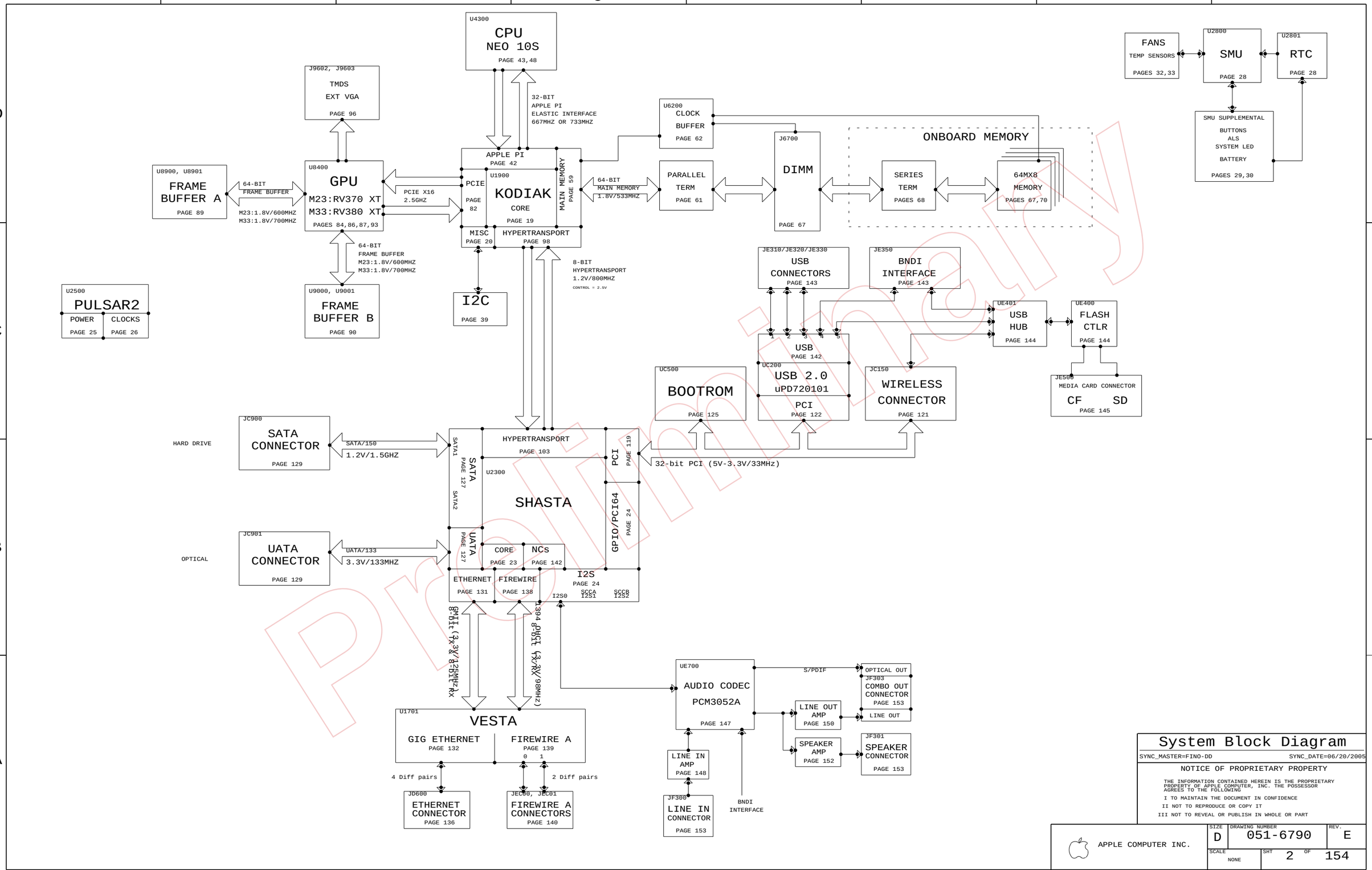

System Block Diagram

SYNC_MASTER=FINO-DD SYNC_DATE=06/20/2005

NOTICE OF PROPRIETARY PROPERTY

THE INFORMATION CONTAINED HEREIN IS THE PROPRIETARY PROPERTY OF APPLE COMPUTER, INC. THE POSSESSOR AGREES TO THE FOLLOWING

I TO MAINTAIN THE DOCUMENT IN CONFIDENCE

II NOT TO REPRODUCE OR COPY IT

III NOT TO REVEAL OR PUBLISH IN WHOLE OR PART

APPLE COMPUTER INC.

SIZE	DRAWING NUMBER	REV.
D	051-6790	E
SCALE NONE	SHT 2 OF 154	

Preliminary

www.laptop-schematics.com

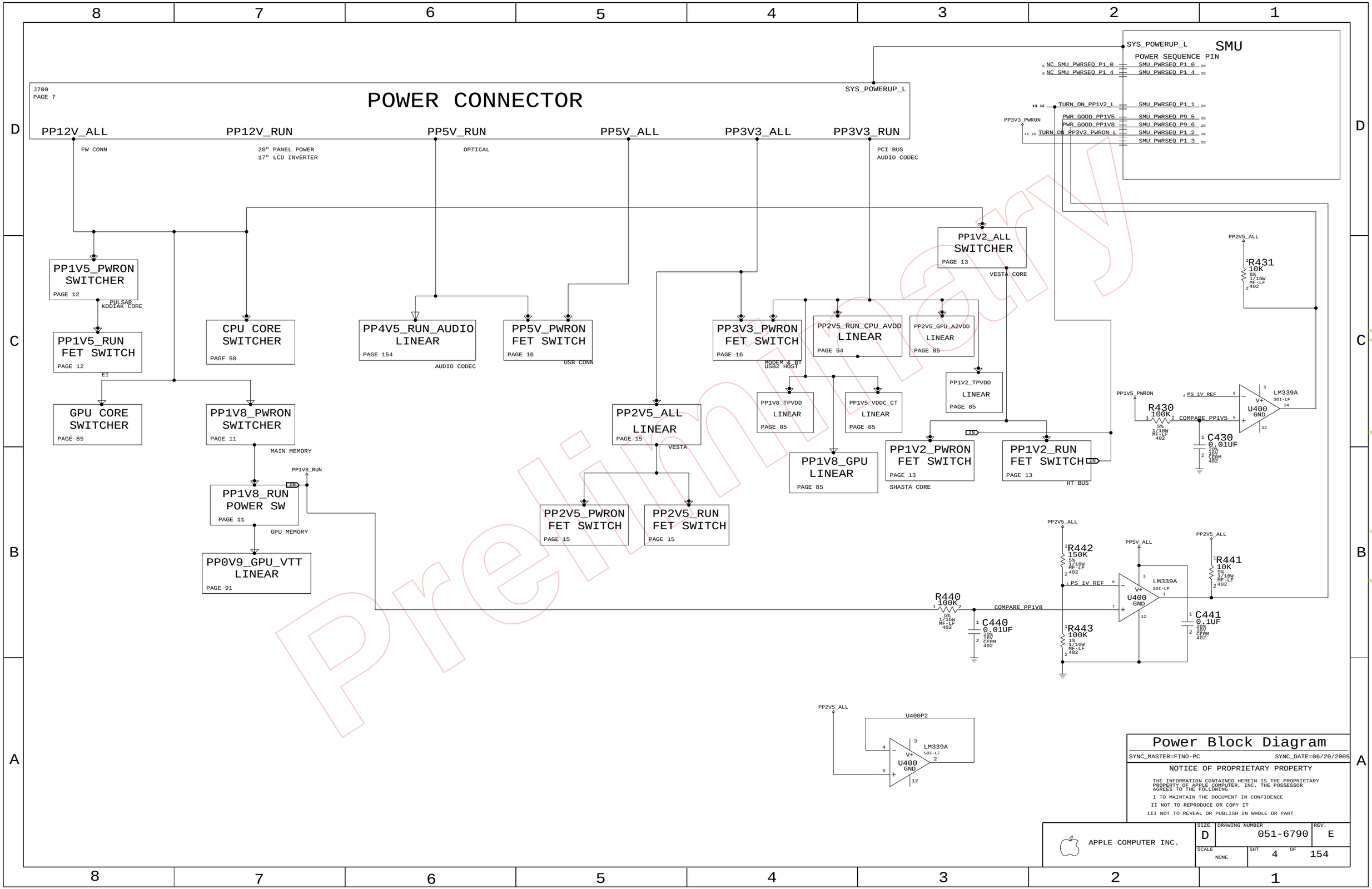

Power Block Diagram

SYNC_MASTER=FINO-PC SYNC_DATE=06/20/2005

NOTICE OF PROPRIETARY PROPERTY

THE INFORMATION CONTAINED HEREIN IS THE PROPRIETARY PROPERTY OF APPLE COMPUTER, INC. THE POSSESSOR AGREES TO THE FOLLOWING

I TO MAINTAIN THE DOCUMENT IN CONFIDENCE

II NOT TO REPRODUCE OR COPY IT

III NOT TO REVEAL OR PUBLISH IN WHOLE OR PART

APPLE COMPUTER INC.

SIZE	DRAWING NUMBER	REV.
D	051-6790	E
SCALE NONE	SHT 4 OF 154	

Preliminary
www.laptop-schematics.com

PROCESSORS

NEED TO UPDATED BIN CODES AS NOTES

PART #	QTY	DEVICE	PACKAGE	DESCRIPTION	VALUE	VOLT.	WATT.	TOL.	REFERENCE DESIGNATOR(S)	BOM OPTION	
337S3224	1	PROCESSOR	CBGA-576-1MM	IC,GPUL,DD3.1,1.9G,85C	1.9GHZ	1.10V	45W	50MV	U4300	17_INCH_LCD	CRITICAL
337S3220	1	PROCESSOR	CBGA-576-1MM	IC,GPUL,DD3.1,2.1G,85C	2.1GHZ	1.10V	45W	50MV	U4300	20_INCH_LCD	CRITICAL

PART NUMBER	ALTERNATE FOR PART NUMBER	BOM OPTION	REF DES	COMMENTS:
337S3225	337S3224	17_INCH_LCD	U4300	IC,DD3.1,1.9G,1.15V
337S3226	337S3224	17_INCH_LCD	U4300	IC,DD3.1,1.9G,1.20V
337S3227	337S3224	17_INCH_LCD	U4300	IC,DD3.1,1.9G,1.25V
337S3228	337S3224	17_INCH_LCD	U4300	IC,DD3.0X,1.9G,1.15V
337S3229	337S3224	17_INCH_LCD	U4300	IC,DD3.0X,1.9G,1.20V
337S3230	337S3224	17_INCH_LCD	U4300	IC,DD3.0X,1.9G,1.25V
337S3231	337S3224	17_INCH_LCD	U4300	IC,DD3.0X,1.9G,1.30V
337S3221	337S3220	20_INCH_LCD	U4300	IC,DD3.1,2.1G,1.15V
337S3222	337S3220	20_INCH_LCD	U4300	IC,DD3.1,2.1G,1.20V
337S3223	337S3220	20_INCH_LCD	U4300	IC,DD3.1,2.1G,1.25V

ASICS

PART#	QTY	DESCRIPTION	REFERENCE DESIGNATOR(S)	BOM OPTION	
343S0379	1	IC,KODIAK,V1.2,PBGA,200MM	U1900		CRITICAL
343S0377	1	IC,ASIC,SHASTA,V1.1,PBGA,LF	U2300		CRITICAL
343S0356	1	IC,ASIC,VESTA,V1.3,LF	U1701		CRITICAL
343S0319	1	IC,PULSAR2,100P,P8MM,BGA	U2500		CRITICAL

MISC PARTS

PART#	QTY	DESCRIPTION	REFERENCE DESIGNATOR(S)	BOM OPTION		
051-6790	1	PCB,SCHEM,MLB,M23	SCH1	17_INCH_LCD		
051-6863	1	PCB,SCHEM,MLB,M33	SCH1	20_INCH_LCD		
820-1783	1	PCB,FAB,MLB,M23	MLB1	17_INCH_LCD	CRITICAL	
820-1766	1	PCB,FAB,MLB,M33	MLB1	20_INCH_LCD	CRITICAL	
062-2082	1	SPEC,VENDOR PACKAGING PROCEDURE	VPP1			
825-6447	1	BARCODE LABEL, MLB	LBL1			
341T1751	1	IC,FLASH,1MX8,3.3V,90NS	UC500		CRITICAL	
341T1752	1	PURCH ASSY, SMU BIG	U2800		CRITICAL	
603-7318	1	M23 CPU HEATSINK	MECH1	OMIT	CRITICAL	
603-7321	1	M33 CPU HEATSINK	MECH1	OMIT	CRITICAL	
603-7319	1	M23 GPU HEATSINK	MECH2	OMIT	CRITICAL	HEATSINKS ARE NOW ON THE PD BOM
603-7322	1	M33 GPU HEATSINK	MECH2	OMIT	CRITICAL	
603-7320	1	M23 NB HEATSINK	MECH3	OMIT	CRITICAL	
603-7323	1	M33 NB HEATSINK	MECH3	OMIT	CRITICAL	
875-1905	1	CPU GAP FILLER	GAP1			
875-2429	1	LED COVER TAPE	TAPE1	17_INCH_LCD		

ALTERNATES

PART NUMBER	ALTERNATE FOR PART NUMBER	BOM OPTION	REF DES	COMMENTS:
378S0140	378S0141		LED700,LED702	KINGBRIGHT LED
343S0388	343S0356		U1701	VESTA A4
126S0078	126S0086		C722	EL CAP
126S0068	126S0088		CF000	EL CAP
353S1321	353S1105		U400	LM339
138S0558	138S0547			10UF CAP ALL LOC.
124-0338	124-0333			PANASONIC CAPS

Preliminary

www.laptop-schematics.com

Table Items

SYNC_MASTER=FINO-M23 SYNC_DATE=08/26/2005

NOTICE OF PROPRIETARY PROPERTY

THE INFORMATION CONTAINED HEREIN IS THE PROPRIETARY PROPERTY OF APPLE COMPUTER, INC. THE POSSESSOR AGREES TO THE FOLLOWING

I TO MAINTAIN THE DOCUMENT IN CONFIDENCE

II NOT TO REPRODUCE OR COPY IT

III NOT TO REVEAL OR PUBLISH IN WHOLE OR PART

APPLE COMPUTER INC.

SIZE	DRAWING NUMBER	REV.
D	051-6790	E
SCALE NONE	SHT 5 OF 154	

NO TEST XW NETS

Property	Net	Sheets
NO_TEST=YES	GND_U1100	11
NO_TEST=YES	GND_U1200	12
NO_TEST=YES	GND_U1300	13
NO_TEST=YES	PP_2V5PWRONNBMISC	20
NO_TEST=YES	PP_1V2PWRONSBVCORE	23
NO_TEST=YES	PP_3V3PWRONSBPCI64	23
NO_TEST=YES	PP_2V5PWRONSB	23
NO_TEST=YES	PP_1V2PWRONSBPLL45VDD	24
NO_TEST=YES	PP_OVDD_PULSAR1	25
NO_TEST=YES	PP_1V2PWRONPULSAR1	25
NO_TEST=YES	PP_1V5PULSAR2	25
NO_TEST=YES	PP_1V5PWRONPULSAR2	25
NO_TEST=YES	GND_SMU_AVSS	28 55
NO_TEST=YES	PP_3V3ALLSMUAVCC	28
NO_TEST=YES	PP_3V3ALLSMU	28
NO_TEST=YES	PP_VEINB	41
NO_TEST=YES	GND_CPU_AVDD	48
NO_TEST=YES	VC_AGND	50
NO_TEST=YES	VC_OUTSEN_R	50
NO_TEST=YES	KPVDD2_FMAX	55
NO_TEST=YES	GND_GPU_PVSS	86
NO_TEST=YES	GND_GPU_MPVSS	87
NO_TEST=YES	GND_AUDIO_MIC	153 154
NO_TEST=YES	GND_GPU_TPVSS	93
NO_TEST=YES	GND_GPU_TXVSSR	93
NO_TEST=YES	GND_GPU_VSSDI	93
NO_TEST=YES	GND_GPU_AVSSN	93
NO_TEST=YES	GND_GPU_AVSSQ	93
NO_TEST=YES	GND_GPU_A2VSSN	93
NO_TEST=YES	GND_GPU_A2VSSQ	93
NO_TEST=YES	KOD_L15_GND	98 101
NO_TEST=YES	PP_3V3SBPCI_B9	
NO_TEST=YES	PP_2V5PWRONSB_B9	119
NO_TEST=YES	PP_VIOPCIUSB2_C2	122
NO_TEST=YES	PP_1V2PWRONDISKSB_CC	127
NO_TEST=YES	PP2V5_VESTA_BIASVDD1	132
NO_TEST=YES	PP2V5_VESTA_XTALVDD1	132
NO_TEST=YES	PP1V2_VESTA_PLLVDD1	132
NO_TEST=YES	PP1V2_VESTA_PLLVDD2	139
NO_TEST=YES	PP2V5_VESTA_BIASVDD2	139
NO_TEST=YES	PP2V5_VESTA_XTALVDD2	139
NO_TEST=YES	PP1V2_VESTA_FAVDDL	139
NO_TEST=YES	PP2V5_VESTA_FAVDDM	139
NO_TEST=YES	PP3V3_VESTA_FAVDDH	139
NO_TEST=YES	PP3V3_PWRON_NEC_AVDD	142
NO_TEST=YES	GND_AUD_LOAMP	150 154
NO_TEST=YES	GND_NEC_AVSS_R	142
NO_TEST=YES	GND_AUDIO_SPKRAMP_PLANE	152 154
NO_TEST=YES	GND_AUDIO_CODEC	147 148 150 154
NO_TEST=YES	KPGND2_FMAX	55
NO_TEST=YES	TDIODE_POS_FMAX	55
NO_TEST=YES	TDIODE_NEG_FMAX	55
NO_TEST=YES	DAGND	55
NO_TEST=YES	INA138_OUT	55
NO_TEST=YES	RAMCLK_AVSS	62
NO_TEST=YES	PP12V_AUDIO_SPKRAMP	7 152
NO_TEST=YES	GND_AUDIO	7 154
NO_TEST=YES	GND_AUDIO_SPKRAMP	7 152 154
NO_TEST=YES	KOD_H05_GND	82 97
NO_TEST=YES	KOD_K07_GND	82 97
NO_TEST=YES	KOD_G10_GND	82 97
NO_TEST=YES	KOD_J13_GND	82 97
NO_TEST=YES	KOD_L13_GND	82 97
NO_TEST=YES	KOD_H08_GND	82 97
NO_TEST=YES	PCIE_SLOTA_PRSNT_L	82 84
NO_TEST=YES	U8500_GND	85
NO_TEST=YES	GND_AUD_LOAMP_CHGPMP	150 154

EE IDENTIFIED NO TEST NETS

Property	Net	Sheets
NO_TEST=YES	NC_EI_NB_TO_CPU_B_CLK_P	56
NO_TEST=YES	NC_EI_NB_TO_CPU_B_CLK_N	56
NO_TEST=YES	NC_EI_NB_TO_CPU_B_AD<0..43>	56
NO_TEST=YES	NC_EI_NB_TO_CPU_B_SR_P<0..1>	56
NO_TEST=YES	NC_EI_NB_TO_CPU_B_SR_N<0..1>	56
NO_TEST=YES	NC_EI_CPU_B_TO_NB_CLK_P	56
NO_TEST=YES	NC_EI_CPU_B_TO_NB_CLK_N	56
NO_TEST=YES	NC_EI_CPU_B_TO_NB_AD<0..43>	56
NO_TEST=YES	NC_EI_CPU_B_TO_NB_SR_P<0..1>	56
NO_TEST=YES	NC_EI_CPU_B_TO_NB_SR_N<0..1>	56
NO_TEST=YES	NC_NB_CPU_A1_INT_L	56
NO_TEST=YES	NC_NB_CPU_B0_INT_L	56
NO_TEST=YES	NC_NB_CPU_B1_INT_L	56
NO_TEST=YES	NC_CPU_A1_QACK_L	56
NO_TEST=YES	NC_CPU_B0_QACK_L	56
NO_TEST=YES	NC_CPU_B1_QACK_L	56
NO_TEST=YES	NC_HT_MB_TO_NB_CAD_P<8..15>	101
NO_TEST=YES	NC_HT_MB_TO_NB_CAD_N<8..15>	101
NO_TEST=YES	NC_HT_NB_TO_MB_CAD_P<8..15>	101
NO_TEST=YES	NC_HT_NB_TO_MB_CAD_N<8..15>	101
NO_TEST=YES	NC_CLK_RAI_200M_N<0>	27
NO_TEST=YES	NC_CLK_RAI_200M_P<0>	27
NO_TEST=YES	NC_CLK_RAI_PCIEA_N<0>	27
NO_TEST=YES	NC_CLK_RAI_PCIEA_P<0>	27
NO_TEST=YES	NC_CLK_RAI_PCIEB_N<0>	27
NO_TEST=YES	NC_CLK_RAI_PCIEB_P<0>	27
NO_TEST=YES	NC_CLK_RAI_PCIEC_N<0>	27
NO_TEST=YES	NC_CLK_RAI_PCIEC_P<0>	27
NO_TEST=YES	NC_A_AVREG_0	82
NO_TEST=YES	NC_A_AVREG_1	82
NO_TEST=YES	NC_A_AVREG_2	82
NO_TEST=YES	NC_CPU_B_APSYNC	27
NO_TEST=YES	NC_EI_CPU_B_SYSCLK_N	27
NO_TEST=YES	NC_EI_CPU_B_SYSCLK_P	27
NO_TEST=YES	NC_HT_NB_TO_MB_CLK_N<1>	101
NO_TEST=YES	NC_HT_NB_TO_MB_CLK_P<1>	101
NO_TEST=YES	NC_J2904_11	29
NO_TEST=YES	NC_J2904_12	29
NO_TEST=YES	NC_NCV1009_1	55
NO_TEST=YES	NC_NCV1009_2	55
NO_TEST=YES	NC_NCV1009_3	55
NO_TEST=YES	NC_NCV1009_4	55
NO_TEST=YES	NC_NCV1009_5	55
NO_TEST=YES	NC_NCV1009_ADJ	55
NO_TEST=YES	NC_RAM_ARB0_REF25MHZ	27
NO_TEST=YES	NC_RAM_ARB1_REF25MHZ	27
NO_TEST=YES	NC_SMU_PWRSEQ_P1_0	4
NO_TEST=YES	NC_SMU_PWRSEQ_P1_4	4
NO_TEST=YES	RFBD<38>	88 89
NO_TEST=YES	RFBD<37>	88 89
NO_TEST=YES	RFBD<36>	88 89
NO_TEST=YES	RFBD<34>	88 89
NO_TEST=YES	RFBD<33>	88 89
NO_TEST=YES	RFBD<32>	88 89
NO_TEST=YES	RFBD<31>	88 89
NO_TEST=YES	RFBD<30>	88 89
NO_TEST=YES	RFBD<28>	88 89
NO_TEST=YES	RFBD<27>	88 89
NO_TEST=YES	RFBD<26>	88 89
NO_TEST=YES	RFBD<25>	88 89
NO_TEST=YES	RFBD<23>	88 89
NO_TEST=YES	RFBD<22>	88 89
NO_TEST=YES	RFBD<21>	88 89
NO_TEST=YES	KPVDD2	48 50 55
NO_TEST=YES	KPGND2	48 50 55
NO_TEST=YES	CPU_DIODE_POS	48 55
NO_TEST=YES	CPU_DIODE_NEG	48 55
NO_TEST=YES	FMAXT_P	55
NO_TEST=YES	FMAXT_M	55
NO_TEST=YES	CORE_ISNS_P	55
NO_TEST=YES	CORE_ISNS_M	55
NO_TEST=YES	PPV_RUN_CPU_AVDD_R_L	48
NO_TEST=YES	NC_CLK_RAI_GIGE_25MHZ	27
NO_TEST=YES	NC_CLK_RAI_REFCLK_66M	27
NO_TEST=YES	NC_CPU_B_TBEN_CLK_US	26
NO_TEST=YES	NC_PMR_CLK_DIS_L	20
NO_TEST=YES	NC_I2S2_MCLK	154
NO_TEST=YES	NC_SATA_RXD_N2_C	129
NO_TEST=YES	NC_SATA_RXD_P2_C	129
NO_TEST=YES	NC_SATA_TXD_N2	129
NO_TEST=YES	NC_SATA_TXD_P2	129
NO_TEST=YES	TP_SB<29>	142
NO_TEST=YES	TP_SB<28>	142
NO_TEST=YES	TP_SB<27>	142
NO_TEST=YES	TP_SB<26>	142
NO_TEST=YES	TP_SB<25>	142
NO_TEST=YES	TP_SB<24>	142
NO_TEST=YES	TP_SB<23>	142
NO_TEST=YES	TP_SB<22>	142
NO_TEST=YES	TP_SB<21>	142
NO_TEST=YES	TP_SB<20>	142
NO_TEST=YES	TP_SB<19>	142
NO_TEST=YES	TP_SB<18>	142
NO_TEST=YES	TP_SB<17>	142
NO_TEST=YES	TP_SB<16>	142
NO_TEST=YES	TP_SB<15>	142
NO_TEST=YES	TP_SB<14>	142
NO_TEST=YES	TP_SB<13>	142
NO_TEST=YES	TP_SB<12>	142
NO_TEST=YES	TP_SB<11>	142
NO_TEST=YES	TP_SB<10>	142
NO_TEST=YES	TP_SB<9>	142
NO_TEST=YES	TP_SB<8>	142
NO_TEST=YES	TP_SB<7>	142
NO_TEST=YES	TP_SB<6>	142
NO_TEST=YES	TP_SB<5>	142
NO_TEST=YES	TP_SB<4>	142
NO_TEST=YES	TP_SB<3>	142
NO_TEST=YES	TP_SB<2>	142
NO_TEST=YES	TP_SB<1>	142
NO_TEST=YES	TP_SB<0>	142
NO_TEST=YES	RFBD<61>	88 89
NO_TEST=YES	RFBD<60>	88 89
NO_TEST=YES	RFBD<59>	88 89
NO_TEST=YES	RFBD<57>	88 89
NO_TEST=YES	RFBD<56>	88 89
NO_TEST=YES	RFBD<54>	88 89
NO_TEST=YES	RFBD<53>	88 89
NO_TEST=YES	RFBD<52>	88 89
NO_TEST=YES	RFBD<50>	88 89
NO_TEST=YES	RFBD<49>	88 89
NO_TEST=YES	RFBD<48>	88 89
NO_TEST=YES	RFBD<47>	88 89
NO_TEST=YES	RFBD<45>	88 89
NO_TEST=YES	RFBD<44>	88 89
NO_TEST=YES	RFBD<42>	88 89
NO_TEST=YES	RFBD<41>	88 89
NO_TEST=YES	RFBD<40>	88 89
NO_TEST=YES	RFBD<126>	88 90
NO_TEST=YES	RFBD<125>	88 90
NO_TEST=YES	RFBD<124>	88 90
NO_TEST=YES	RFBD<122>	88 90
NO_TEST=YES	RFBD<121>	88 90
NO_TEST=YES	RFBD<120>	88 90
NO_TEST=YES	RFBD<118>	88 90
NO_TEST=YES	RFBD<117>	88 90
NO_TEST=YES	RFBD<116>	88 90
NO_TEST=YES	RFBD<114>	88 90
NO_TEST=YES	RFBD<113>	88 90
NO_TEST=YES	RFBD<112>	88 90
NO_TEST=YES	RFBD<110>	88 90
NO_TEST=YES	RFBD<109>	88 90
NO_TEST=YES	RFBD<108>	88 90
NO_TEST=YES	RFBD<106>	88 90
NO_TEST=YES	RFBD<105>	88 90
NO_TEST=YES	RFBD<104>	88 90
NO_TEST=YES	RFBD<102>	88 90
NO_TEST=YES	RFBD<101>	88 90
NO_TEST=YES	RFBD<100>	88 90
NO_TEST=YES	RFBD<98>	88 90
NO_TEST=YES	RFBD<97>	88 90
NO_TEST=YES	RFBD<96>	88 90
NO_TEST=YES	RFBD<95>	88 90
NO_TEST=YES	RFBD<94>	88 90
NO_TEST=YES	RFBD<92>	88 90
NO_TEST=YES	RFBD<91>	88 90
NO_TEST=YES	RFBD<90>	88 90
NO_TEST=YES	RFBD<88>	88 90
NO_TEST=YES	RFBD<87>	88 90
NO_TEST=YES	RFBD<86>	88 90
NO_TEST=YES	RFBD<85>	88 90
NO_TEST=YES	RFBD<83>	88 90
NO_TEST=YES	RFBD<82>	88 90
NO_TEST=YES	RFBD<81>	88 90
NO_TEST=YES	RFBD<79>	88 90
NO_TEST=YES	RFBD<78>	88 90
NO_TEST=YES	RFBD<76>	88 90
NO_TEST=YES	RFBD<75>	88 90
NO_TEST=YES	RFBD<74>	88 90
NO_TEST=YES	RFBD<72>	88 90
NO_TEST=YES	RFBD<71>	88 90
NO_TEST=YES	RFBD<70>	88 90
NO_TEST=YES	RFBD<69>	88 90
NO_TEST=YES	RFBD<67>	88 90
NO_TEST=YES	RFBD<66>	88 90
NO_TEST=YES	RFBD<65>	88 90
NO_TEST=YES	RFBD<62>	88 89

Property	Net	Sheets
NO_TEST=YES	TP_FBBCS1_L	87
NO_TEST=YES	AUD_4V5_FB	154
NO_TEST=YES	ITS_RUNNING	7
NO_TEST=YES	LED801_1	8
NO_TEST=YES	LED802_1	8
NO_TEST=YES	PCI_CLK66M_SB_INT_R	26
NO_TEST=YES	Q800_D	8
NO_TEST=YES	Q800_G	8
NO_TEST=YES	Q801_B	8
NO_TEST=YES	Q802_B	8
NO_TEST=YES	Q802_E	8
NO_TEST=YES	Q803_B	8
NO_TEST=YES	TP_USB2_PWREN<0>	143
NO_TEST=YES	TP_USB2_PWREN<1>	143
NO_TEST=YES	TP_SB_FSTEST	24
NO_TEST=YES	TP_SB_PLLTEST	24
NO_TEST=YES	TP_USB2_PWREN<2>	143
NO_TEST=YES	TP_USB2_PWREN<3>	143
NO_TEST=YES	TP_USB2_PWREN<4>	143
NO_TEST=YES	TP_NEC_NTEST1	122
NO_TEST=YES	TP_NEC_SMC	122
NO_TEST=YES	TP_NEC_SMI_L	122
NO_TEST=YES	TP_NEC_SRCLK	122
NO_TEST=YES	TP_NEC_SRMOD	122
NO_TEST=YES	TP_NEC_TEST	122
NO_TEST=YES	UATA_DASP_L_DS	129
NO_TEST=YES	RFBD<19>	88 89
NO_TEST=YES	RFBD<18>	88 89
NO_TEST=YES	RFBD<16>	88 89
NO_TEST=YES	RFBD<15>	88 89
NO_TEST=YES	RFBD<14>	88 89
NO_TEST=YES	RFBD<13>	88 89
NO_TEST=YES	RFBD<11>	88 89
NO_TEST=YES	RFBD<10>	88 89
NO_TEST=YES	RFBD<8>	88 89
NO_TEST=YES	RFBD<7>	88 89
NO_TEST=YES	RFBD<6>	88 89
NO_TEST=YES	RFBD<5>	88 89
NO_TEST=YES	RFBD<3>	88 89
NO_TEST=YES	RFBD<2>	88 89
NO_TEST=YES	RFBD<1>	88 89
NO_TEST=YES	RAM_DQ_R<63>	61 68 70
NO_TEST=YES	RAM_DQ_R<60>	61 68 70
NO_TEST=YES	RAM_DQ_R<59>	61 68 70
NO_TEST=YES	RAM_DQ_R<58>	61 68 70
NO_TEST=YES	RAM_DQ_R<57>	61 68 70
NO_TEST=YES	RAM_DQ_R<56>	61 68 70
NO_TEST=YES	RAM_DQ_R<54>	61 68 70
NO_TEST=YES	RAM_DQ_R<53>	61 68 70
NO_TEST=YES	RAM_DQ_R<52>	61 68 70
NO_TEST=YES	RAM_DQ_R<50>	61 68 70
NO_TEST=YES	RAM_DQ_R<49>	61 68 70
NO_TEST=YES	RAM_DQ_R<48>	61 68 70
NO_TEST=YES	RAM_DQ_R<46>	61 68 70
NO_TEST=YES	RAM_DQ_R<45>	61 68 70
NO_TEST=YES	RAM_DQ_R<44>	61 68 70
NO_TEST=YES	RAM_DQ_R<43>	61 68 70
NO_TEST=YES	RAM_DQ_R<41>	61 68 70
NO_TEST=YES	RAM_DQ_R<40>	61 68 70
NO_TEST=YES	RAM_DQ_R<37>	61 68 70
NO_TEST=YES	RAM_DQ_R<38>	61 68 70
NO_TEST=YES	RAM_DQ_R<36>	61 68 70
NO_TEST=YES	RAM_DQ_R<34>	61 68 70
NO_TEST=YES	RAM_DQ_R<33>	61 68 70
NO_TEST=YES	RAM_DQ_R<32>	61 68 70
NO_TEST=YES	RAM_DQ_R<30>	61 68 69
NO_TEST=YES	RAM_DQ_R<29>	61 68 69
NO_TEST=YES	RAM_DQ_R<28>	61 68 69
NO_TEST=YES	RAM_DQ_R<31>	61 68 69
NO_TEST=YES	RAM_DQ_R<25>	61 68 69
NO_TEST=YES	RAM_DQ_R<24>	61 68 69
NO_TEST=YES	RAM_DQ_R<22>	61 68 69
NO_TEST=YES	RAM_DQ_R<21>	61 68 69
NO_TEST=YES	RAM_DQ_R<20>	61 68 69
NO_TEST=YES	RAM_DQ_R<19>	61 68 69
NO_TEST=YES	RAM_DQ_R<17>	61 68 69
NO_TEST=YES	RAM_DQ_R<16>	61 68 69
NO_TEST=YES	RAM_DQ_R<14>	61 68 69
NO_TEST=YES	RAM_DQ_R<13>	61 68 69
NO_TEST=YES	RAM_DQ_R<12>	61 68 69
NO_TEST=YES	RAM_DQ_R<11>	61 68 69

FUNC TEST NETS

NOTES FROM TOM FUSSELMAN

PLACE TWO TEST POINTS ON TOP SIDE
FOR PP3V3_ALL AND GND
PLACE WITHIN 1 INCH OF EACH OTHER
USE FAT TRACES

Property	Net	Sheets
FUNC_TEST=TRUE	PPVCORE_CPU	50
FUNC_TEST=TRUE	=PP3V3_ALL_SMU	7 28 29
FUNC_TEST=TRUE	=PP5V_RUN_CPU	7 8
FUNC_TEST=TRUE	SYS_POWER_BUTTON_L	28 29
FUNC_TEST=TRUE	POWER_BUTTON_L	29
FUNC_TEST=TRUE	RESET_BUTTON_L	29
FUNC_TEST=TRUE	SMU_RESET_L	28 29
FUNC_TEST=TRUE	SYS_POWERUP_L	7 12 28 50 85

TOP SIDE ONLY

Property	Net	Sheets
FUNC_TEST=TRUE	SMU_BOOT_SCLK	28 29
FUNC_TEST=TRUE	SMU_BOOT_RXD	28 29
FUNC_TEST=TRUE	SMU_BOOT_CE	28 29
FUNC_TEST=TRUE	SMU_BOOT_CNVSS	28 29
FUNC_TEST=TRUE	SMU_BOOT_TXD	28 29
FUNC_TEST=TRUE	SMU_BOOT_BUSY	28 29
FUNC_TEST=TRUE	SMU_MANUAL_RESET_L	29

Sheets	Net	Property
7	PP1V2_ALL	FUNC_TEST=TRUE
7	PP3V3_ALL	FUNC_TEST=TRUE
7	PP5V_ALL	FUNC_TEST=TRUE
7	PP1V8_RUN	FUNC_TEST=TRUE
7	PP2V5_RUN	FUNC_TEST=TRUE
16 7	PP3V3_RUN	FUNC_TEST=TRUE
7	PP12V_RUN	FUNC_TEST=TRUE
7	PP1V5_PWRON	FUNC_TEST=TRUE
	GND	FUNC_TEST=TRUE

Property	Net	Sheets
NO_TEST=YES	RAM_DQ_R<9>	61 68 69
NO_TEST=YES	RAM_DQ_R<8>	61 68 69
NO_TEST=YES	RAM_DQ_R<7>	61 68 69
NO_TEST=YES	RAM_DQ_R<6>	61 68 69
NO_TEST=YES	RAM_DQ_R<5>	61 68 69
NO_TEST=YES	RAM_DQ_R<3>	61 68 69
NO_TEST=YES	RAM_DQ_R<2>	61 68 69
NO_TEST=YES	RAM_DQ_R<1>	61 68 69

FUNC TEST 1 OF 2

SYNC_MASTER=FINO-ME SYNC_DATE=06/20/2005

NOTICE OF PROPRIETARY PROPERTY

THE INFORMATION CONTAINED HEREIN IS THE PROPRIETARY PROPERTY OF APPLE COMPUTER, INC. THE POSSESSOR AGREES TO THE FOLLOWING

I TO MAINTAIN THE DOCUMENT IN CONFIDENCE
II NOT TO REPRODUCE OR COPY IT
III NOT TO REVEAL OR PUBLISH IN WHOLE OR PART

APPLE COMPUTER INC. SIZE D DRAWING NUMBER 051-6790 REV. E SCALE NONE SHT 6 OF 154

www.laptop-schematics.com

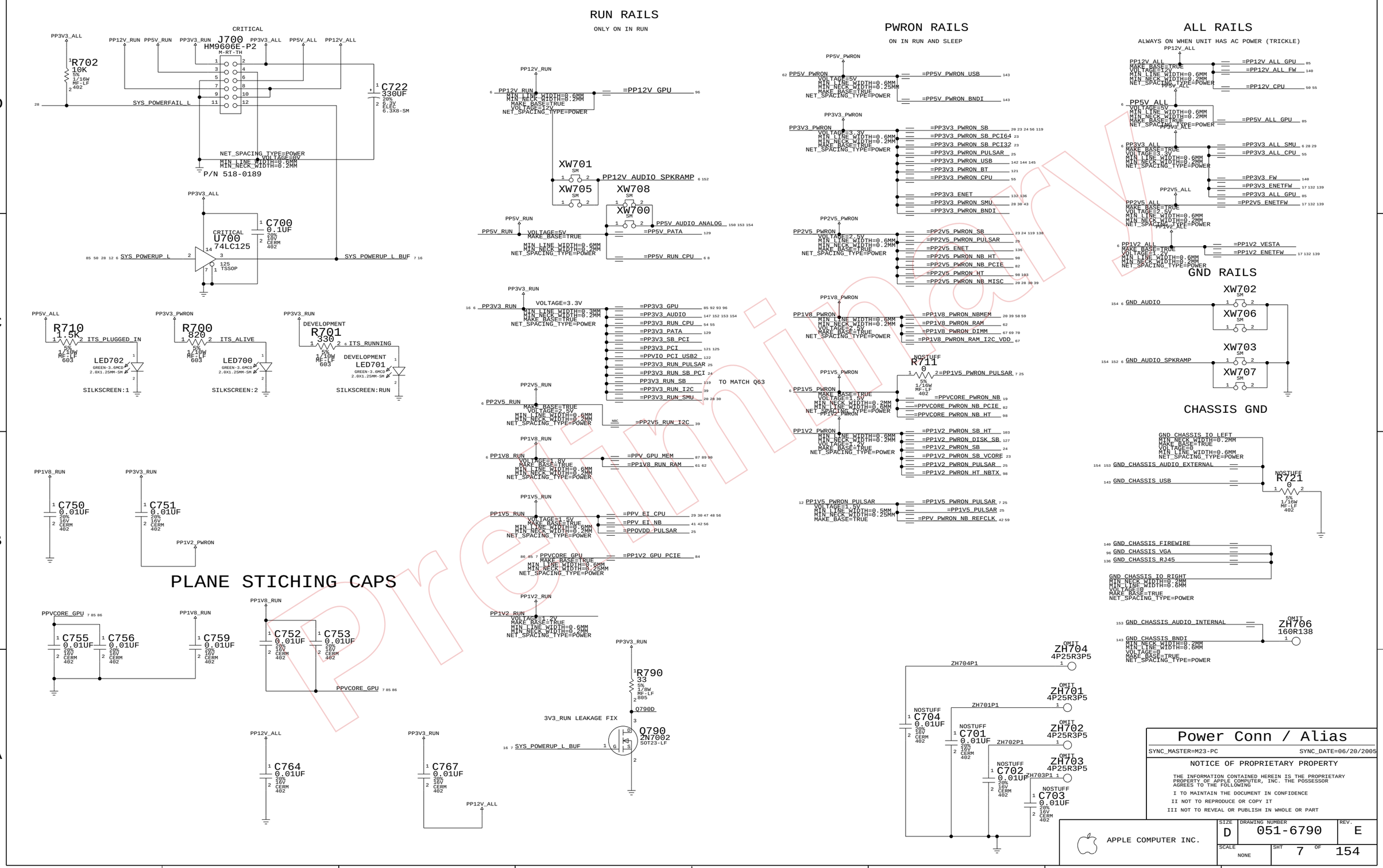

www.laptop-schematics.com

DIAG LED

(OVERTEMP LED)

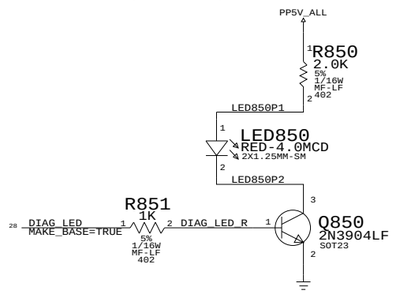

PLL LOCK LED

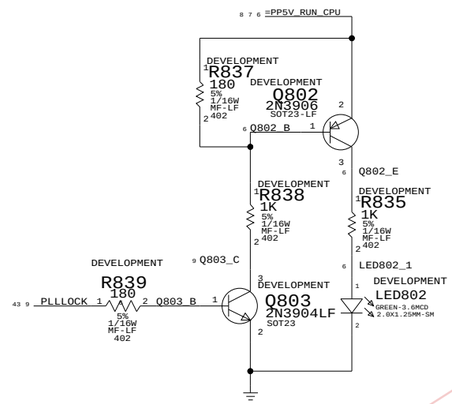

CHKSTOP LED

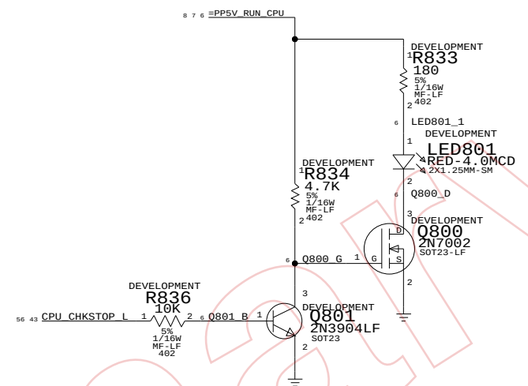

SERIAL DEBUG

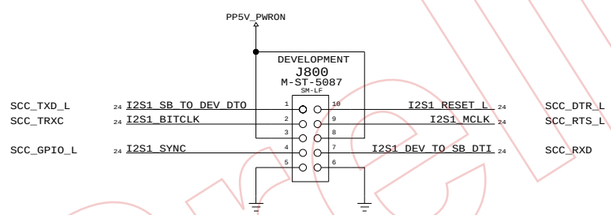

CPU HEATSINK MOUNTING HOLES

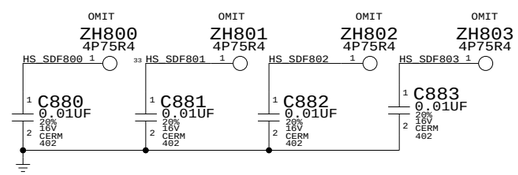

Preliminary

www.laptop-schematics.com

Signal Alias

SYNC_MASTER=FINO-DD SYNC_DATE=06/20/2005

NOTICE OF PROPRIETARY PROPERTY

THE INFORMATION CONTAINED HEREIN IS THE PROPRIETARY PROPERTY OF APPLE COMPUTER, INC. THE POSSESSOR AGREES TO THE FOLLOWING

I TO MAINTAIN THE DOCUMENT IN CONFIDENCE

II NOT TO REPRODUCE OR COPY IT

III NOT TO REVEAL OR PUBLISH IN WHOLE OR PART

APPLE COMPUTER INC.

SIZE	DRAWING NUMBER	REV.
D	051-6790	E
SCALE NONE	SHT 8 OF 154	

I1	NO_TEST=YES	ENET_TXD_R<7>	130 131
I2	NO_TEST=YES	ENET_TXD_R<6>	130 131
I3	NO_TEST=YES	ENET_TXD_R<5>	130 131
I4	NO_TEST=YES	ENET_TXD_R<4>	130 131
I5	NO_TEST=YES	ENET_TXD_R<3>	130 131
I6	NO_TEST=YES	ENET_TXD_R<2>	130 131
I7	NO_TEST=YES	ENET_TXD_R<1>	130 131
I8	NO_TEST=YES	ENET_TXD_R<0>	130 131
I9	NO_TEST=YES	ENET_TXD<7>	130 131 132
I10	NO_TEST=YES	ENET_TXD<6>	130 131 132
I12	NO_TEST=YES	ENET_TXD<5>	130 131 132
I11	NO_TEST=YES	ENET_TXD<4>	130 131 132
I13	NO_TEST=YES	ENET_TXD<3>	130 131 132
I14	NO_TEST=YES	ENET_TXD<2>	130 131 132
I15	NO_TEST=YES	ENET_TXD<1>	130 131 132
I16	NO_TEST=YES	ENET_TXD<0>	130 131 132
I18	NO_TEST=YES	ENET_RXD_R<7>	130 131 132
I17	NO_TEST=YES	ENET_RXD_R<6>	130 131 132
I19	NO_TEST=YES	ENET_RXD_R<5>	130 131 132
I20	NO_TEST=YES	ENET_RXD_R<4>	130 131 132
I21	NO_TEST=YES	ENET_RXD_R<3>	130 131 132
I22	NO_TEST=YES	ENET_RXD_R<2>	130 131 132
I24	NO_TEST=YES	ENET_RXD_R<1>	130 131 132
I23	NO_TEST=YES	ENET_RXD_R<0>	130 131 132
I25	NO_TEST=YES	ENET_RXD<7>	130 131
I26	NO_TEST=YES	ENET_RXD<6>	130 131
I27	NO_TEST=YES	ENET_RXD<5>	130 131
I28	NO_TEST=YES	ENET_RXD<4>	130 131
I30	NO_TEST=YES	ENET_RXD<3>	130 131
I29	NO_TEST=YES	ENET_RXD<2>	130 131
I31	NO_TEST=YES	ENET_RXD<1>	130 131
I32	NO_TEST=YES	ENET_RXD<0>	130 131
I33	NO_TEST=YES	ENET_TX_EN_R	130 131
I34	NO_TEST=YES	ENET_TX_ER_R	130 131
I36	NO_TEST=YES	ENET_TX_EN	130 131 132
I35	NO_TEST=YES	ENET_TX_ER	130 131 132
I37	NO_TEST=YES	TP_HT_MB_TO_NB_CLK_N<1>	101
I38	NO_TEST=YES	TP_HT_MB_TO_NB_CLK_P<1>	101
I39	NO_TEST=YES	NC_CPU_AFN	56
I40	NO_TEST=YES	NC_I2C_SMU_CPU_SCL_IN	31
I42	NO_TEST=YES	NC_PSRO	56
I41	NO_TEST=YES	NC_PSRO_ENABLE	56
I43	NO_TEST=YES	NC_SLOT_TOTAL_PWR	31
I44	NO_TEST=YES	NC_SMU_CPU_VID_LE0	31
I45	NO_TEST=YES	NC_SMU_CPU_VID_LE1	31
I46	NO_TEST=YES	NC_SMU_FAN_RPM3	31
I48	NO_TEST=YES	NC_SMU_FAN_RPM4	31
I47	NO_TEST=YES	NC_SMU_FAN_RPM5	31
I49	NO_TEST=YES	NC_SMU_FAN_TACH3	31
I50	NO_TEST=YES	NC_SMU_FAN_TACH4	31
I51	NO_TEST=YES	NC_SMU_FAN_TACH5	31
I52	NO_TEST=YES	NC_SMU_FAN_TACH7	31
I54	NO_TEST=YES	NC_SMU_SER_SEL	31
I53	NO_TEST=YES	NC_SYS_DOOR_AJAR_L	31
I55	NO_TEST=YES	TP_VESTA_2_5V_EN	17
I56	NO_TEST=YES	TP_VESTA_AN_EN	132
I57	NO_TEST=YES	TP_VESTA_DNC_C9	17
I58	NO_TEST=YES	TP_VESTA_DNC_E9	17
I60	NO_TEST=YES	TP_VESTA_EN_10B	132
I59	NO_TEST=YES	TP_VESTA_ER	132
I61	NO_TEST=YES	TP_VESTA_F1000	132
I62	NO_TEST=YES	TP_VESTA_FDX	132
I63	NO_TEST=YES	TP_VESTA_FDXLED_L	132
I64	NO_TEST=YES	TP_VESTA_HUB	132
I66	NO_TEST=YES	TP_VESTA_LINK1_L	132
I65	NO_TEST=YES	TP_VESTA_LINK2_L	132
I67	NO_TEST=YES	TP_VESTA_MANMS	132
I68	NO_TEST=YES	TP_VESTA_PHYA<0>	132
I69	NO_TEST=YES	TP_VESTA_PHYA<1>	132
I70	NO_TEST=YES	TP_VESTA_PHYA<2>	132
I72	NO_TEST=YES	TP_VESTA_PHYA<3>	132
I71	NO_TEST=YES	TP_VESTA_PHYA<4>	132
I73	NO_TEST=YES	TP_VESTA_RBC0	132
I74	NO_TEST=YES	TP_VESTA_RBC1	132
I75	NO_TEST=YES	TP_VESTA_REGCTL1	17
I76	NO_TEST=YES	TP_VESTA_REGCTL2	17
I78	NO_TEST=YES	TP_VESTA_REGSEN1	17
I77	NO_TEST=YES	TP_VESTA_REGSEN2	17
I79	NO_TEST=YES	TP_VESTA_REGSUP1	17
I80	NO_TEST=YES	TP_VESTA_REGSUP2	17
I81	NO_TEST=YES	TP_VESTA_RGMIIEN	132
I82	NO_TEST=YES	TP_VESTA_SPD0	132
I84	NO_TEST=YES	TP_VESTA_TDBL<0>	139
I83	NO_TEST=YES	TP_VESTA_TDBL<1>	139
I85	NO_TEST=YES	TP_VESTA_TDBL<2>	139
I86	NO_TEST=YES	TP_VESTA_TEST<0>	132
I87	NO_TEST=YES	TP_VESTA_TEST<1>	132
I88	NO_TEST=YES	TP_VESTA_TEST_1394<0>	139
I90	NO_TEST=YES	TP_VESTA_TEST_1394<1>	139
I89	NO_TEST=YES	TP_VESTA_TVCO	132
I222	NO_TEST=YES	CARD_READER_ACTIVITY_R	144
I223	NO_TEST=YES	TP_VESTA_FAVDDL	139
I224	NO_TEST=YES	TP_NB_A_TRIGGER_OUT	56
I225	NO_TEST=YES	TP_NB_B_TRIGGER_OUT	56

I91	NO_TEST=YES	TP_VESTA_TVCO_24	139
I92	NO_TEST=YES	TP_VESTA_TXC_RXC_DELAY	132
I93	NO_TEST=YES	TP_I2S2_SB_TO_DEV_DTO	154
I94	NO_TEST=YES	TP_NB_APSYNC	44
I95	NO_TEST=YES	TP_SB_WATCHDOG	24
I96	NO_TEST=YES	NC_CPU_TBEN_CLK	
I97	NO_TEST=YES	NC_J3108_10	31
I98	NO_TEST=YES	NC_J3108_11	31
I99	NO_TEST=YES	NC_J3108_12	31
I100	NO_TEST=YES	NC_J3108_8	31
I101	NO_TEST=YES	NC_J3108_9	31
I102	NO_TEST=YES	NC_JTAGMUX_3	30
I103	NO_TEST=YES	NC_PP1V5_PULSAR	12

THE FOLLOWING NETS ARE USED ONLY
WHEN THE DEVELOPMENT BOM OPTION IS ENABLED

I108	NO_TEST=YES	Q803_C	8
I109	NO_TEST=YES	PLLLOCK	8 43
I110	NO_TEST=YES	LED_PP1V8_RUN_P	11
I111	NO_TEST=YES	LED_PP1V8_RUN_N	11
I112	NO_TEST=YES	PP1V5_RUN_FOR_LED	12
I113	NO_TEST=YES	LED_PP1V5_RUN_N	12
I114	NO_TEST=YES	LED_PP1V5_RUN_P	12
I115	NO_TEST=YES	PULSAR_1V5_RUN_SWITCH	12
I120	NO_TEST=YES	PP1V2_RUN_FOR_LED	13
I121	NO_TEST=YES	LED_PP1V2_RUN_N	13
I122	NO_TEST=YES	LED_PP1V2_RUN_P	13
I123	NO_TEST=YES	KP_V<1>	55
I124	NO_TEST=YES	KP_V<2>	55
I125	NO_TEST=YES	CPU_SENSE_KP_V	55
I126	NO_TEST=YES	NB_PLL_OUT_TRG_R	
I127	NO_TEST=YES	NB_PLL_OUT_TRG	59
I128	NO_TEST=YES	PP5V_T555	
I131	NO_TEST=YES	T555_DISC	
I132	NO_TEST=YES	T555_THRES	
I129	NO_TEST=YES	T555_OUT	
I130	NO_TEST=YES	T555_PWM	
I133	NO_TEST=YES	PP3V3_GPU_TSENSE	93
I134	NO_TEST=YES	TSENSE_GPU_OVERTEMP_L	93
I135	NO_TEST=YES	TSENSE_GPU_ADD0	93
I136	NO_TEST=YES	TSENSE_GPU_ADD1	93
I137	NO_TEST=YES	GPU_DIODE_PLUS	93
I138	NO_TEST=YES	GPU_DIODE_MINUS	93
I139	NO_TEST=YES	LED8700_P	136
I140	NO_TEST=YES	LED8701_P	136

THE FOLLOWING PULSAR NETS WILL BE
TESTED VIA TEST JET

I143	NO_TEST=YES	CPU_A_TBEN_CLK_R	26
I144	NO_TEST=YES	CPU_B_TBEN_CLK_R	26
I145	NO_TEST=YES	CPU_A_APSYNC_R	26
I146	NO_TEST=YES	CPU_B_APSYNC_R	26
I148	NO_TEST=YES	NB_APSYNC_R	26
I149	NO_TEST=YES	HT_SB_REFCLK_R	26
I147	NO_TEST=YES	HT_NB_REFCLK_H0_R	26
I150	NO_TEST=YES	HT_NB_REFCLK_L0_R	26
I151	NO_TEST=YES	CLK_RAIREF_200M_P_R	26
I152	NO_TEST=YES	CLK_RAIREF_200M_N_R	26
I153	NO_TEST=YES	NB_PMR_CLK_P_R	26
I154	NO_TEST=YES	NB_PMR_CLK_N_R	26
I155	NO_TEST=YES	NB_PCIE_REFCLK_P_C	26
I156	NO_TEST=YES	NB_PCIE_REFCLK_N_C	26
I158	NO_TEST=YES	GFX_SLOT_PCIE_REFCLK_P_C	26
I159	NO_TEST=YES	GFX_SLOT_PCIE_REFCLK_N_C	26
I157	NO_TEST=YES	PCIE_A_REFCLKIN_P_C	26
I160	NO_TEST=YES	PCIE_A_REFCLKIN_N_C	26
I161	NO_TEST=YES	PCIE_B_REFCLKIN_P_C	26
I162	NO_TEST=YES	PCIE_B_REFCLKIN_N_C	26
I163	NO_TEST=YES	PCIE_C_REFCLKIN_P_C	26
I164	NO_TEST=YES	PCIE_C_REFCLKIN_N_C	26
I165	NO_TEST=YES	NB_DDR_REFCLK_P_R	26
I166	NO_TEST=YES	NB_DDR_REFCLK_N_R	26
I168	NO_TEST=YES	CLK_RAI_GIGE_25MHZ_R	26
I169	NO_TEST=YES	QUA0_REF_25MHZ_R	26
I167	NO_TEST=YES	SB_CLK25M_SATA_R	26
I170	NO_TEST=YES	QUA1_REF_25MHZ_R	26
I171	NO_TEST=YES	PCI_CLK33M_SB_EXT_R	26
I172	NO_TEST=YES	SB_AIRPRT_CLK_33MHZ_R	26
I173	NO_TEST=YES	CLK_RAI_REFCLK_66M_R	26
I174	NO_TEST=YES	SB_USB2_CLK_33MHZ_R	26

THE FOLLOWING NETS DO NOT HAVE
TEST POINT BECAUSE OF ROUTING DENSITY
AND SIGNAL INTEGRITY.
TEST COVERAGE WILL BE BY FCT
NOTE FOR SHARING: DO NOT INCLUDE THIS LIST UNTIL
PCB LAYOUT ADDS TEST POINTS. THIS LIST IS A RESULT OF PCB
LAYOUT HAVING DIFFICULTY PLACING TEST POINTS ON THESE NETS

I177	NO_TEST=YES	100M_N<0>	82 97
I178	NO_TEST=YES	100M_P<0>	82 97
I179	NO_TEST=YES	CKA_N<0>	84 97
I180	NO_TEST=YES	CKA_P<0>	84 97
I181	NO_TEST=YES	HT_NB_N<0>	98 101
I182	NO_TEST=YES	HT_NB_P<0>	98 101
I183	NO_TEST=YES	HT_NB_REFCLK_NF<0>	98 101
I184	NO_TEST=YES	HT_NB_REFCLK_PF<0>	98 101
I185	NO_TEST=YES	HT_NB_TO_SB_CAD_N<0..7>	101
I186	NO_TEST=YES	HT_NB_TO_SB_CAD_P<0..7>	101
I187	NO_TEST=YES	HT_NB_TO_SB_CLK_P<0>	101
I188	NO_TEST=YES	HT_NB_TO_SB_CLK_N<0>	101
I189	NO_TEST=YES	HT_SB_TO_NB_CAD_N<0..7>	101
I190	NO_TEST=YES	HT_SB_TO_NB_CAD_P<0..7>	101
I191	NO_TEST=YES	HT_SB_TO_NB_CLK_P<0>	101
I192	NO_TEST=YES	HT_SB_TO_NB_CLK_N<0>	101
I193	NO_TEST=YES	PCIE_SLOTA_TO_NB_N<0..15>	9 82 84 97
I194	NO_TEST=YES	PCIE_SLOTA_TO_NB_P<0..15>	9 82 84 97
I195	NO_TEST=YES	UATA_DA<0>	127 129
I196	NO_TEST=YES	UATA_DD<1>	127 129
I197	NO_TEST=YES	UATA_DD<14>	127 129
I198	NO_TEST=YES	PCIE_NB_TO_SLOTA_N<0>	9 82 84 97
I199	NO_TEST=YES	PCIE_NB_TO_SLOTA_N<3>	9 82 84 97
I200	NO_TEST=YES	PCIE_NB_TO_SLOTA_NF<13>	9 82 97
I201	NO_TEST=YES	PCIE_NB_TO_SLOTA_NF<7>	9 82 97
I202	NO_TEST=YES	PCIE_NB_TO_SLOTA_P<1>	9 82 84 97
I203	NO_TEST=YES	PCIE_NB_TO_SLOTA_P<10>	9 82 84 97
I204	NO_TEST=YES	PCIE_NB_TO_SLOTA_PF<13>	9 82 97
I205	NO_TEST=YES	PCIE_NB_TO_SLOTA_PF<14>	9 82 97
I206	NO_TEST=YES	PCIE_NB_TO_SLOTA_NF<12>	9 82 97
I207	NO_TEST=YES	PCIE_NB_TO_SLOTA_PF<10>	9 82 97
I208	NO_TEST=YES	PCIE_NB_TO_SLOTA_PF<4>	9 82 97
I209	NO_TEST=YES	HT_MB_TO_NB_CTL_N<1>	98
I210	NO_TEST=YES	HT_MB_TO_NB_CTL_P<1>	98
I211	NO_TEST=YES	HT_NB_TO_MB_CTL_N<1>	98
I212	NO_TEST=YES	HT_NB_TO_MB_CTL_P<1>	98
I213	NO_TEST=YES	HT_NB_TO_SB_CTL_N<0>	101
I214	NO_TEST=YES	HT_SB_TO_NB_CTL_P<0>	101
I215	NO_TEST=YES	CLK_KOD_100M_NF<0>	82 97
I216	NO_TEST=YES	CLK_KOD_100M_PF<0>	82 97
I217	NO_TEST=YES	EI_CPU_TO_NB_CLK_N	43 56
I218	NO_TEST=YES	EI_CPU_TO_NB_CLK_P	43 56
I219	NO_TEST=YES	EI_CPU_TO_NB_SR_N<1>	9 43 56
I220	NO_TEST=YES	EI_CPU_TO_NB_SR_P<1>	9 43 56
I221	NO_TEST=YES	EI_NB_TO_CPU_CLK_N	43 56
I227	NO_TEST=YES	EI_NB_TO_CPU_CLK_P	43 56
I228	NO_TEST=YES	EI_NB_TO_CPU_SR_N<0>	9 43 56
I229	NO_TEST=YES	EI_NB_TO_CPU_SR_P<0>	9 43 56
I230	NO_TEST=YES	PLLTESTOUT	43 47
I231	NO_TEST=YES	UATA_DD<13>	127 129
I232	NO_TEST=YES	CPU_SPARE2	43 47
I233	NO_TEST=YES	RFBD<51>	88 89
I234	NO_TEST=YES	TP_CPU_TRIGGER_OUT	56
I235	NO_TEST=YES	UATA_DD<12>	127 129
I236	NO_TEST=YES	EI_CPU_SYSCLK_P	43 56
I237	NO_TEST=YES	EI_CPU_TO_NB_SR_N<1>	9 43 56
I238	NO_TEST=YES	EI_CPU_TO_NB_SR_P<1>	9 43 56
I239	NO_TEST=YES	EI_NB_TO_CPU_SR_N<0>	9 43 56
I240	NO_TEST=YES	EI_NB_TO_CPU_SR_P<0>	9 43 56

JTAG TEST POINTS NEED TO BE ON THE BOTTOM
OF THE BOARD
ADDING FUNC_TEST=TRUE TO THESE NETS

I220	FUNC_TEST=TRUE	TP_JTAG_SB_TCK	20
I222	FUNC_TEST=TRUE	TP_JTAG_SB_TDI	20
I223	FUNC_TEST=TRUE	TP_JTAG_SB_TDO	20
I221	FUNC_TEST=TRUE	TP_JTAG_SB_TMS	20
I230	FUNC_TEST=TRUE	JTAG_SB_TRST_L	20 24
I232	FUNC_TEST=TRUE	JTAG_NB_TCK	20 30
I234	FUNC_TEST=TRUE	JTAG_NB_TDI	20 30
I233	FUNC_TEST=TRUE	JTAG_NB_TDO	20 30
I231	FUNC_TEST=TRUE	JTAG_NB_TMS	20 30
I241	FUNC_TEST=TRUE	JTAG_NB_TRST_L	20
I243	FUNC_TEST=TRUE	TP_JTAG_VESTA_TDI	17
I242	FUNC_TEST=TRUE	TP_JTAG_VESTA_TDO	17
I239	FUNC_TEST=TRUE	TP_JTAG_VESTA_TCK	17
I244	FUNC_TEST=TRUE	TP_JTAG_VESTA_TMS	17
I245	FUNC_TEST=TRUE	TP_JTAG_VESTA_TRST_L	17
I246	FUNC_TEST=TRUE	JTAG_CPU_TCK	30 43
I248	FUNC_TEST=TRUE	JTAG_CPU_TDI	30 43
I247	FUNC_TEST=TRUE	JTAG_CPU_TDO	30 43 47
I249	FUNC_TEST=TRUE	JTAG_CPU_TMS	30 43
I250	FUNC_TEST=TRUE	JTAG_CPU_TRST_L	43 47

ADDING NO_TEST TO ALL PCIE NETS
TO AVOID STUBS
WILL GET COVERAGE IN FCT WITH A DIAG
THAT CHECKS THAT THE BUS IS 16 LANES WIDE

I249	NO_TEST=YES	PCIE_NB_TO_SLOTA_NF<0..15>	9 82 97
I256	NO_TEST=YES	PCIE_NB_TO_SLOTA_PF<0..15>	9 82 97
I251	NO_TEST=YES	PCIE_NB_TO_SLOTA_N<0..15>	9 82 84 97
I252	NO_TEST=YES	PCIE_NB_TO_SLOTA_P<0..15>	9 82 84 97
I253	NO_TEST=YES	PCIE_SLOTA_TO_NB_NF<0..15>	84 97
I254	NO_TEST=YES	PCIE_SLOTA_TO_NB_PF<0..15>	84 97
I255	NO_TEST=YES	PCIE_SLOTA_TO_NB_N<0..15>	9 82 84 97
I258	NO_TEST=YES	PCIE_SLOTA_TO_NB_P<0..15>	9 82 84 97

Preliminary

www.laptop-schematics.com

FUNC TEST 2 OF 2

SYNC_MASTER=FINO-ME SYNC_DATE=06/20/2005

NOTICE OF PROPRIETARY PROPERTY

THE INFORMATION CONTAINED HEREIN IS THE PROPRIETARY PROPERTY OF APPLE COMPUTER, INC. THE POSSESSOR AGREES TO THE FOLLOWING

I TO MAINTAIN THE DOCUMENT IN CONFIDENCE

II NOT TO REPRODUCE OR COPY IT

III NOT TO REVEAL OR PUBLISH IN WHOLE OR PART

APPLE COMPUTER INC.

SIZE	DRAWING NUMBER	REV.
D	051-6790	E
SCALE NONE	SHT 9 OF 154	

1.8V VOLTAGE REGULATOR

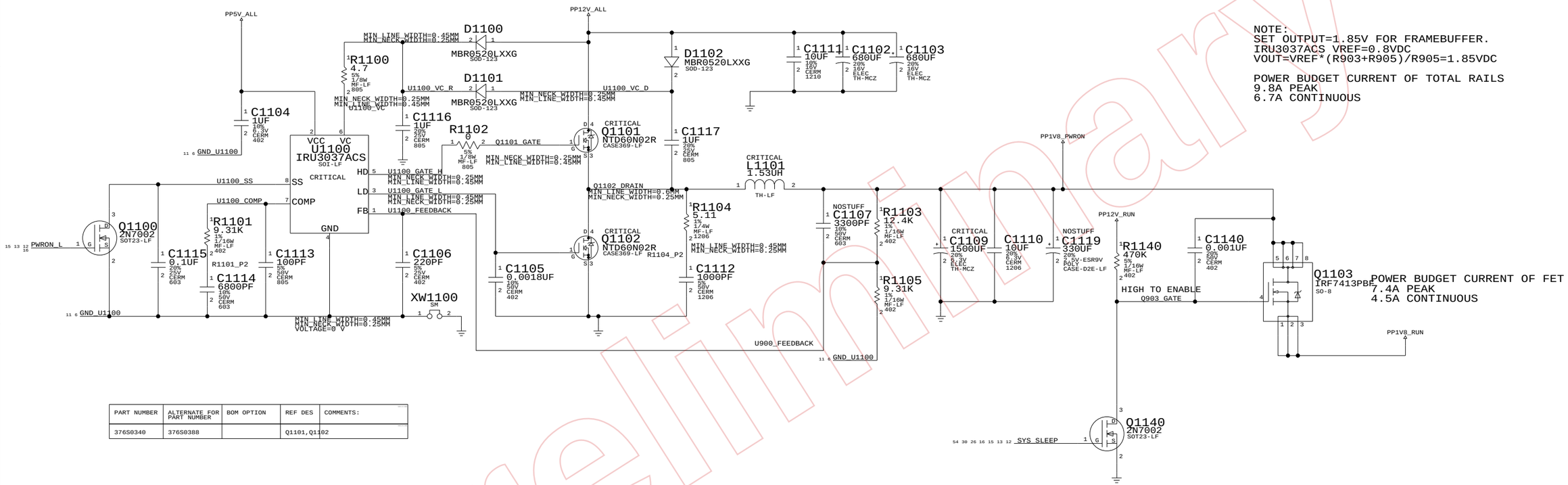

NOTE:
SET OUTPUT=1.85V FOR FRAMEBUFFER.
IRU3037ACS VREF=0.8VDC
VOUT=VREF*(R903+R905)/R905=1.85VDC

POWER BUDGET CURRENT OF TOTAL RAILS
9.8A PEAK
6.7A CONTINUOUS

POWER BUDGET CURRENT OF FET
7.4A PEAK
4.5A CONTINUOUS

PART NUMBER	ALTERNATE FOR PART NUMBER	BOM OPTION	REF DES	COMMENTS:
376S0340	376S0388		Q1101,Q1102	

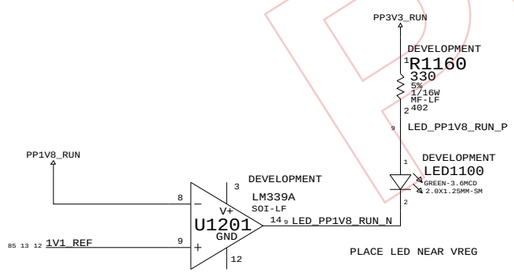

1.8V Vreg	
SYNC_MASTER=M23-PC	SYNC_DATE=06/20/2005

NOTICE OF PROPRIETARY PROPERTY

THE INFORMATION CONTAINED HEREIN IS THE PROPRIETARY PROPERTY OF APPLE COMPUTER, INC. THE POSSESSOR AGREES TO THE FOLLOWING

I TO MAINTAIN THE DOCUMENT IN CONFIDENCE
II NOT TO REPRODUCE OR COPY IT
III NOT TO REVEAL OR PUBLISH IN WHOLE OR PART

APPLE COMPUTER INC.

SIZE	DRAWING NUMBER	REV.
D	051-6790	E
SCALE NONE	SHT 11 OF 154	

Preliminary
www.laptop-schematics.com

KODIAK CORE VOLTAGE REGULATOR

NOTE:

IRU3037ACS VREF=0.8VDC
VOUT=VREF*(R1203+R1205)/R1205=1.25VDC

LOAD FROM POWER BUDGET
8.5A PEAK CURRENT DRAW
7.2A CONTINUOUS CURRENT DRAW

1.35V	R1205=2.87K
1.30V	R1205=3.24K
1.25V	R1205=3.65K

PART NUMBER	ALTERNATE FOR PART NUMBER	BOM OPTION	REF DES	COMMENTS:
376S0340	376S0388		Q1201,Q1202	

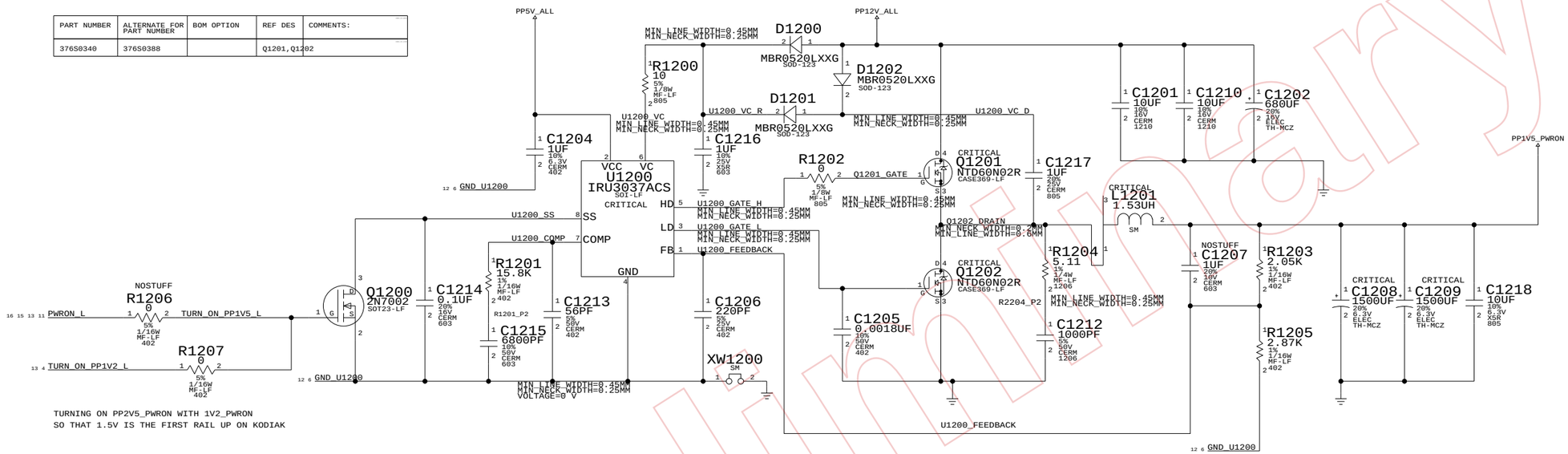

TURNING ON PP2V5_PWRON WITH 1V2_PWRON
SO THAT 1.5V IS THE FIRST RAIL UP ON KODIAK

LOAD FROM POWER BUDGET
1.3A PEAK CURRENT DRAW
1.0A CONTINUOUS CURRENT DRAW

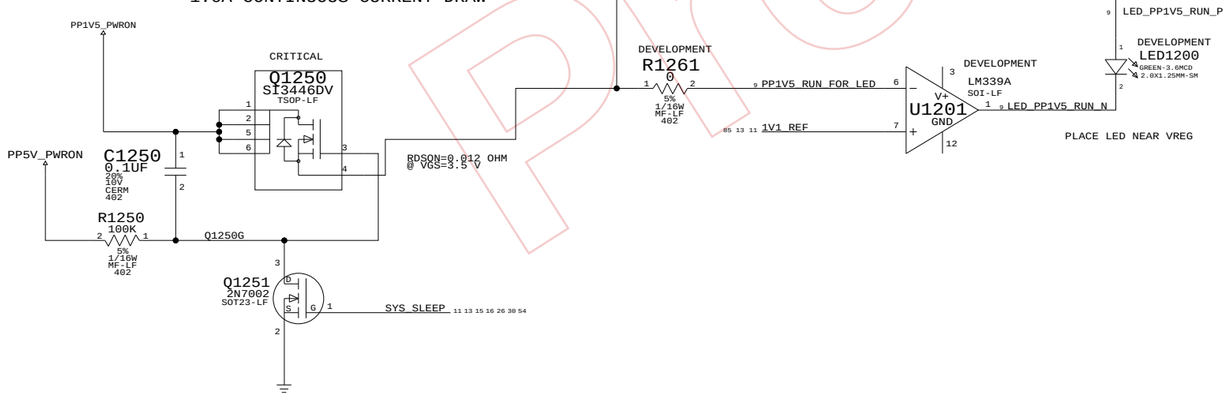

PP1V5_PWRON_PULSAR

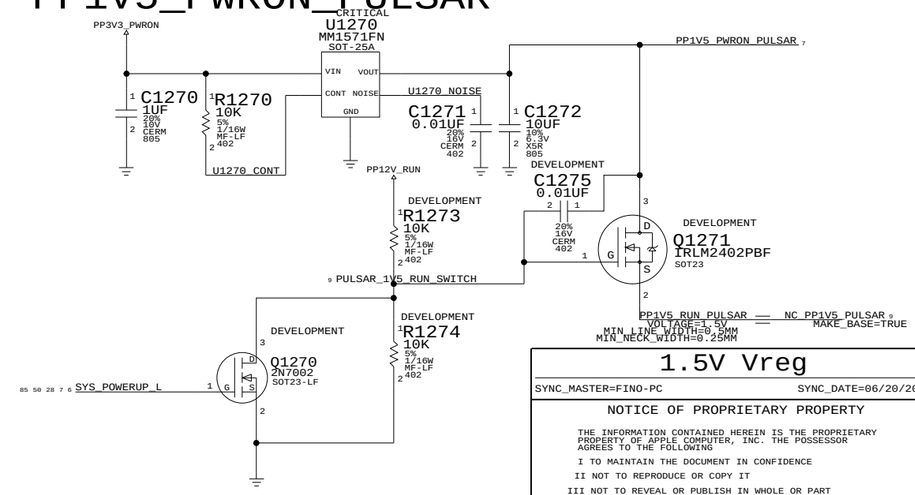

1.5V Vreg

SYNC_MASTER=FINO-PC SYNC_DATE=06/20/2005

NOTICE OF PROPRIETARY PROPERTY

THE INFORMATION CONTAINED HEREIN IS THE PROPRIETARY PROPERTY OF APPLE COMPUTER, INC. THE POSSESSOR AGREES TO THE FOLLOWING

I TO MAINTAIN THE DOCUMENT IN CONFIDENCE
II NOT TO REPRODUCE OR COPY IT
III NOT TO REVEAL OR PUBLISH IN WHOLE OR PART

APPLE COMPUTER INC.

SIZE	DRAWING NUMBER	REV.
D	051-6790	E
SCALE NONE	SHT 12 OF 154	

Preliminary
www.laptop-schematics.com

PP1V2_ALL VOLTAGE REGULATOR

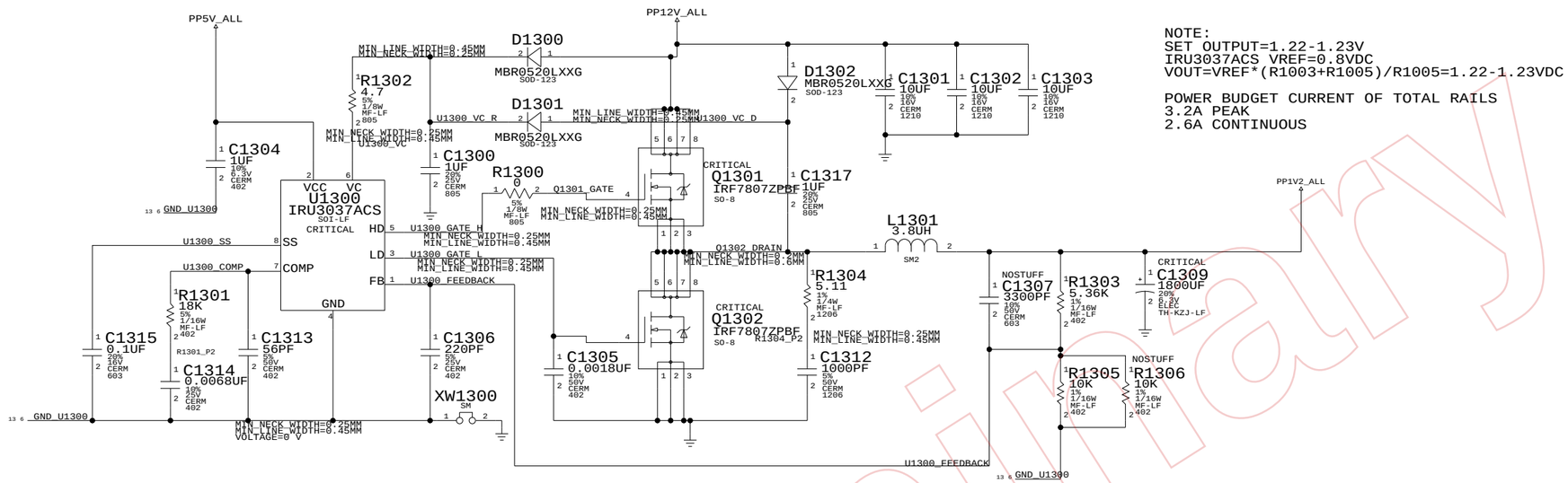

NOTE:
SET OUTPUT=1.22-1.23V
IRU3037ACS VREF=0.8VDC
VOUT=VREF*(R1003+R1005)/R1005=1.22-1.23VDC

POWER BUDGET CURRENT OF TOTAL RAILS
3.2A PEAK
2.6A CONTINUOUS

PP1V2_PWRON FET SWITCH

PEAK CURRENT 1.3A
1.0A CONTINUOUS

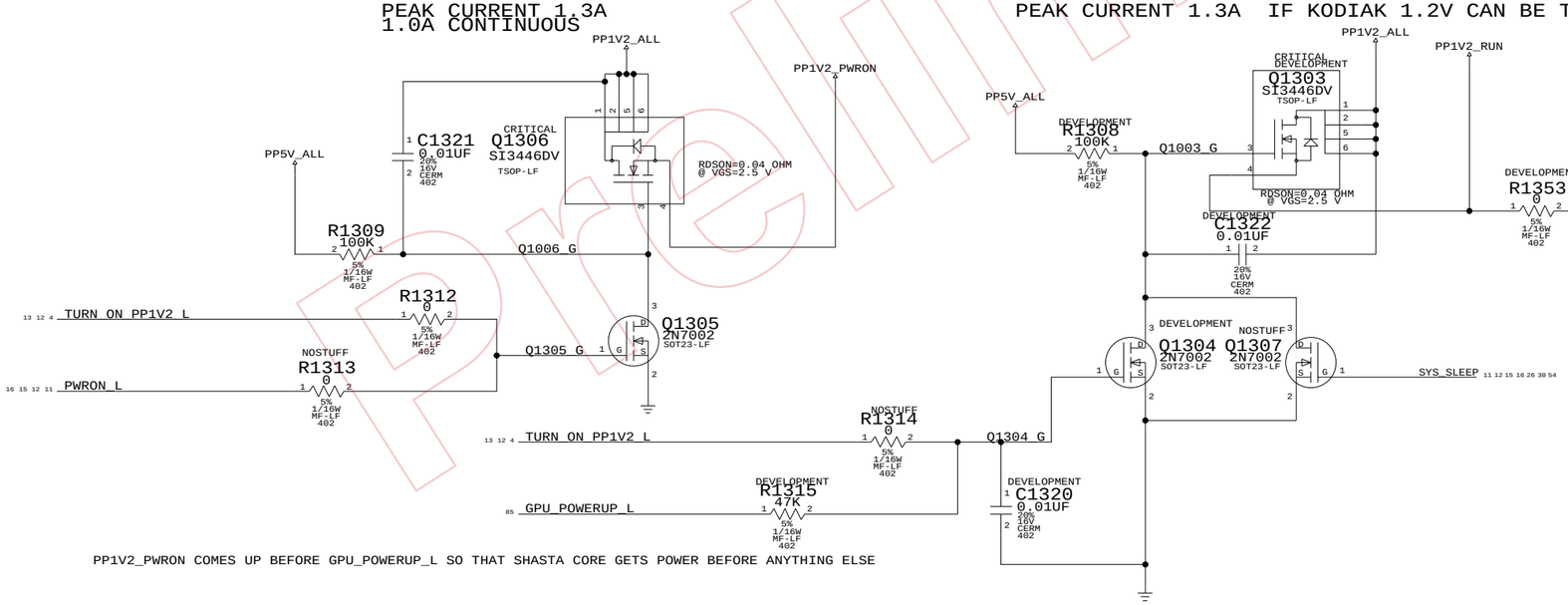

PP1V2_PWRON COMES UP BEFORE GPU_POWERUP_L SO THAT SHASTA CORE GETS POWER BEFORE ANYTHING ELSE

PP1V2_RUN FET SWITCH

PEAK CURRENT 1.3A IF KODIAK 1.2V CAN BE TURNED OFF IN SLEEP. 0.6A/M33 0.0A/M23 IF NOT

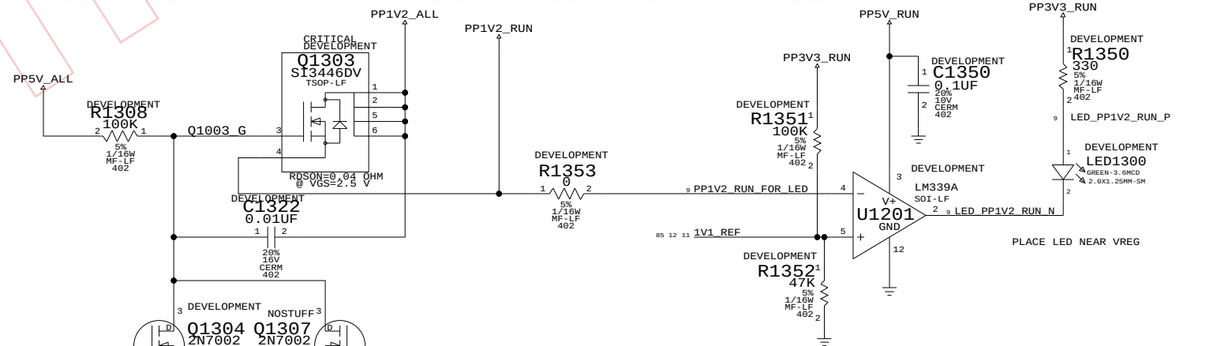

1.2V Vreg	
SYNC_MASTER=FINO-PC	SYNC_DATE=06/20/2005

NOTICE OF PROPRIETARY PROPERTY

THE INFORMATION CONTAINED HEREIN IS THE PROPRIETARY PROPERTY OF APPLE COMPUTER, INC. THE POSSESSOR AGREES TO THE FOLLOWING

I TO MAINTAIN THE DOCUMENT IN CONFIDENCE

II NOT TO REPRODUCE OR COPY IT

III NOT TO REVEAL OR PUBLISH IN WHOLE OR PART

APPLE COMPUTER INC.

SIZE	DRAWING NUMBER	REV.
D	051-6790	E
SCALE NONE	SHT 13 OF 154	

Preliminary

www.laptop-schematics.com

PP2V5_ALL VOLTAGE REGULATOR

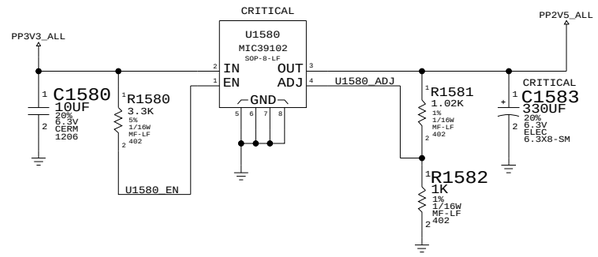

NOTE:
SET OUTPUT=2.5V
IRU3037CS VREF=1.24VDC
VOUT=VREF*(R1581+R1582)+1=5.505VDC

POWER BUDGET CURRENT OF TOTAL RAILS
0.2A PEAK
0.1A CONTINUOUS

PP2V5_PWRON FET SWITCH

PEAK CURRENT 0.1A

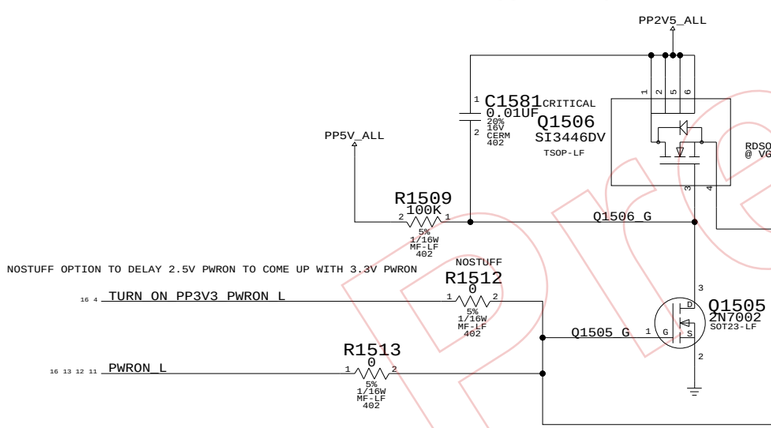

PP2V5_RUN FET SWITCH

PEAK CURRENT 0.1A

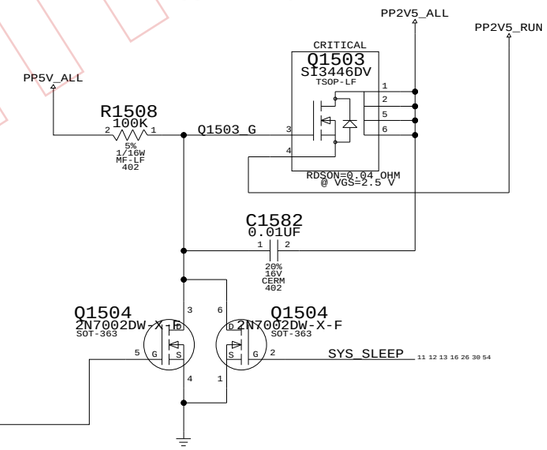

Preliminary

www.laptop-schematics.com

2.5V Vreg

SYNC_MASTER=FINO-PC SYNC_DATE=06/20/2005

NOTICE OF PROPRIETARY PROPERTY

THE INFORMATION CONTAINED HEREIN IS THE PROPRIETARY PROPERTY OF APPLE COMPUTER, INC. THE POSSESSOR AGREES TO THE FOLLOWING

I TO MAINTAIN THE DOCUMENT IN CONFIDENCE
II NOT TO REPRODUCE OR COPY IT
III NOT TO REVEAL OR PUBLISH IN WHOLE OR PART

APPLE COMPUTER INC.

SIZE	DRAWING NUMBER	REV.
D	051-6790	E
SCALE NONE	SHT 15 OF 154	

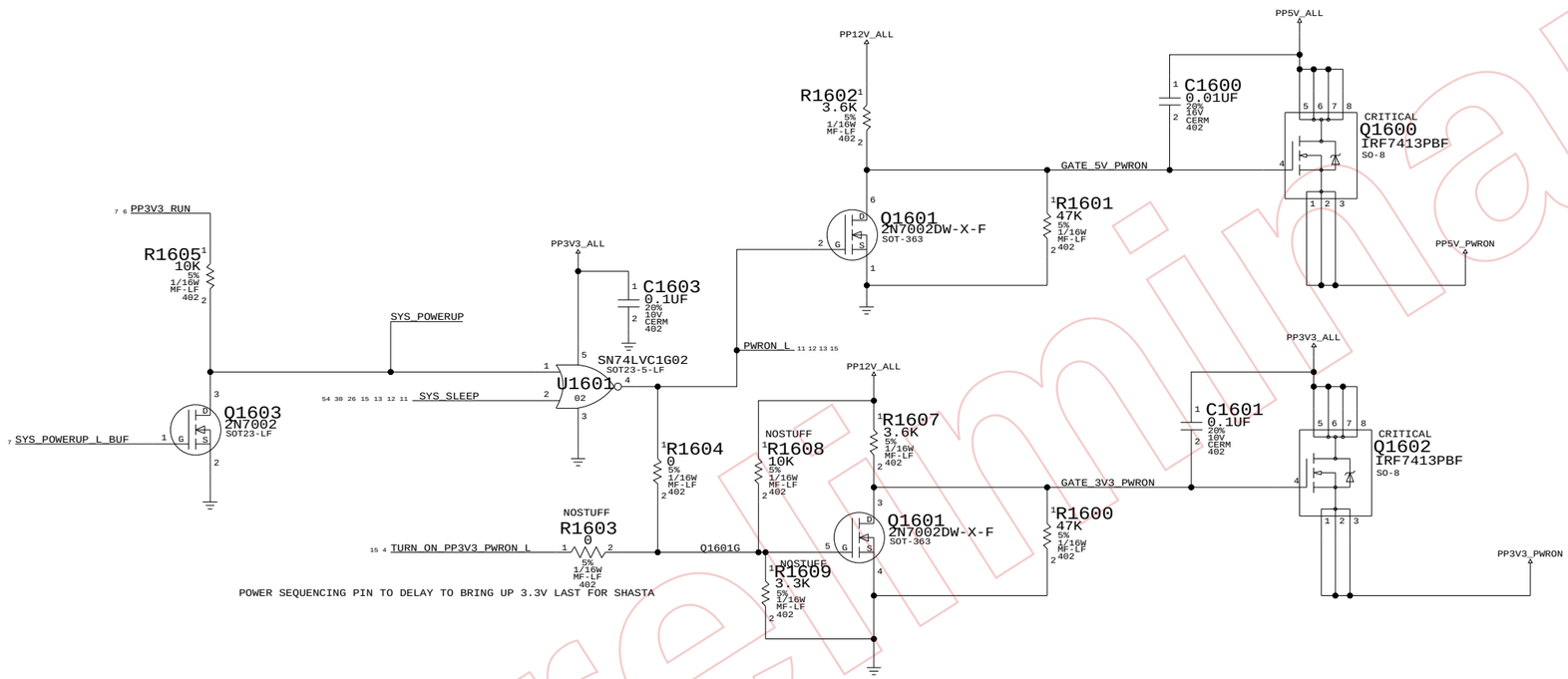

5V & 3.3V Fets

SYNC_MASTER=FINO-PC SYNC_DATE=06/20/2005

NOTICE OF PROPRIETARY PROPERTY

THE INFORMATION CONTAINED HEREIN IS THE PROPRIETARY PROPERTY OF APPLE COMPUTER, INC. THE POSSESSOR AGREES TO THE FOLLOWING

I TO MAINTAIN THE DOCUMENT IN CONFIDENCE

II NOT TO REPRODUCE OR COPY IT

III NOT TO REVEAL OR PUBLISH IN WHOLE OR PART

APPLE COMPUTER INC.

SIZE	DRAWING NUMBER	REV.
D	051-6790	E
SCALE NONE	SHT 16 OF 154	

Preliminary

www.laptop-schematics.com

Page Notes

Power aliases required by this page:

Signal aliases required by this page:
(NONE)

BOM options provided by this page:
- VESTA1V2_BURST / VESTA1V2_PULSE
  Controls operating mode of Vesta 1.2V regulator. If both options are off the regulator will be in continuous mode.

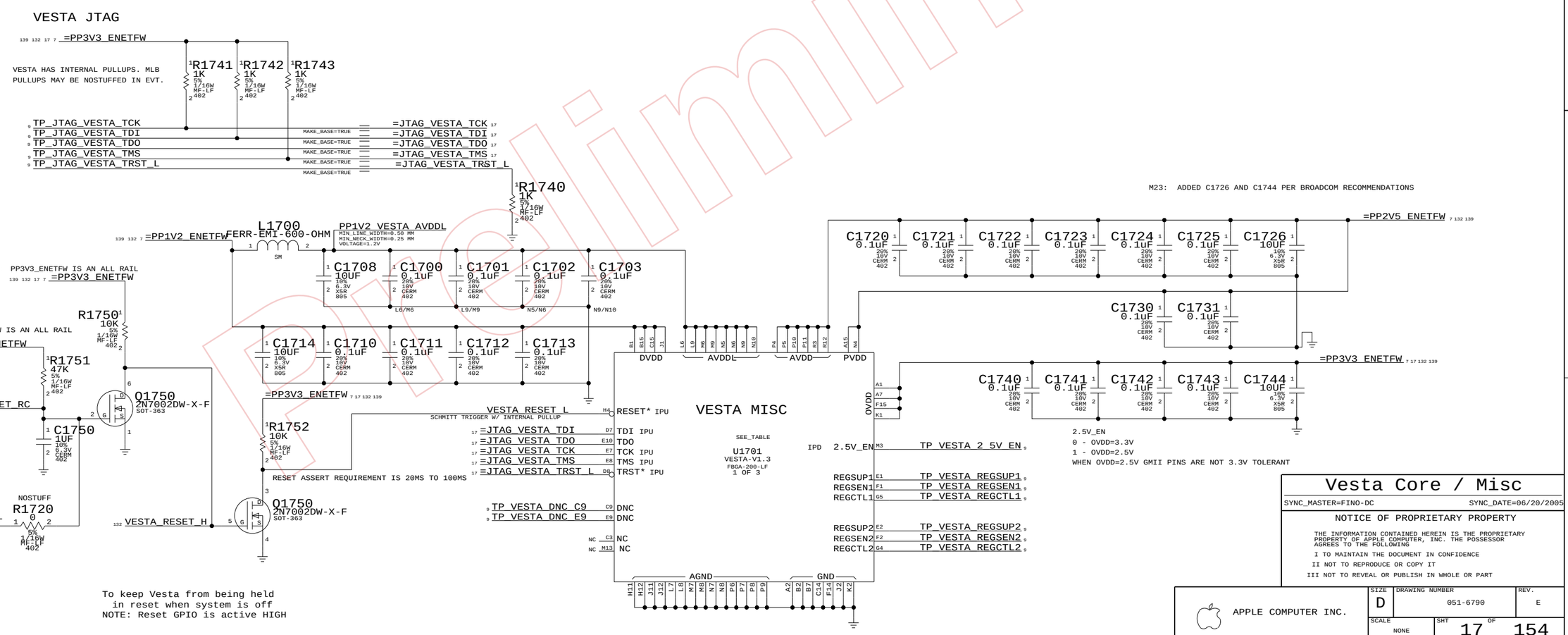

Vesta Core / Misc

SYNC_MASTER=FINO-DC SYNC_DATE=06/20/2005

NOTICE OF PROPRIETARY PROPERTY

THE INFORMATION CONTAINED HEREIN IS THE PROPRIETARY PROPERTY OF APPLE COMPUTER, INC. THE POSSESSOR AGREES TO THE FOLLOWING

I TO MAINTAIN THE DOCUMENT IN CONFIDENCE

II NOT TO REPRODUCE OR COPY IT

III NOT TO REVEAL OR PUBLISH IN WHOLE OR PART

APPLE COMPUTER INC.

SIZE	DRAWING NUMBER	REV.
D	051-6790	E
SCALE NONE	SHT 17 OF 154	

Preliminary

www.laptop-schematics.com

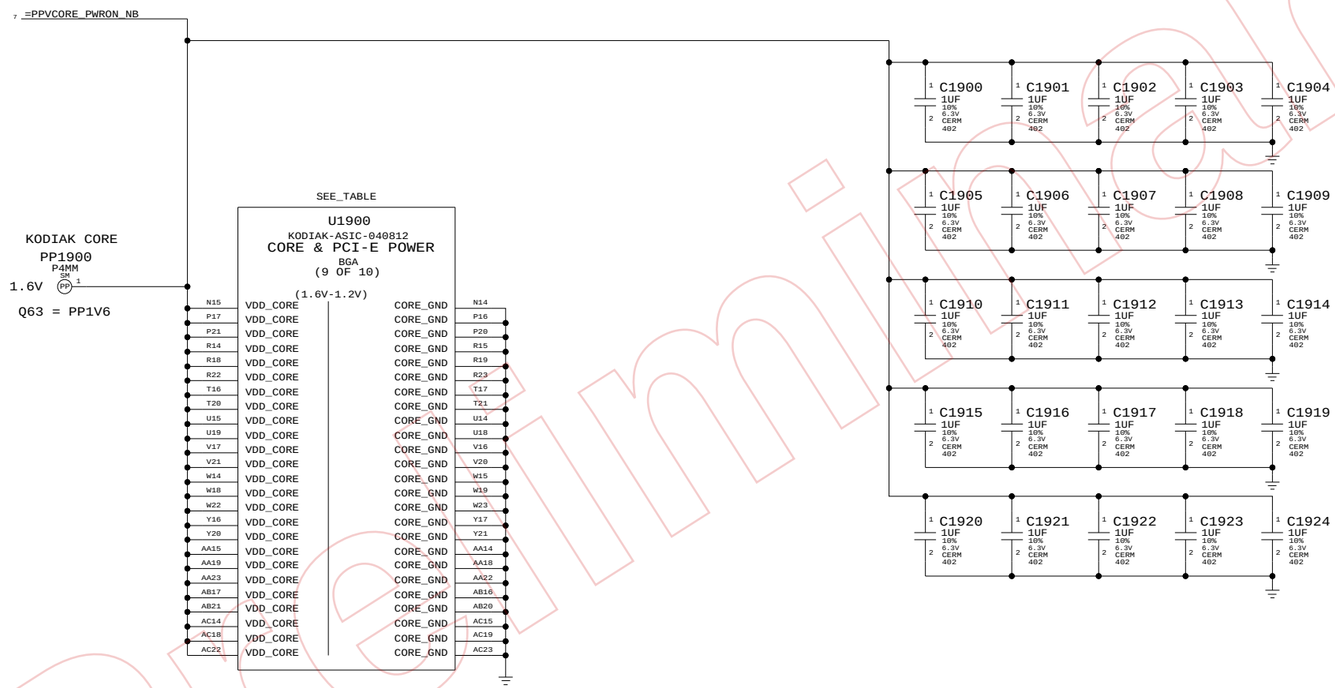

Preliminary

www.laptop-schematics.com

KODIAK CORE & BYPASS

SYNC_MASTER=Q63 SYNC_DATE=08/01/2005

NOTICE OF PROPRIETARY PROPERTY
LAST MODIFIED=Tue Nov 1 14:55:45 2005
THE INFORMATION CONTAINED HEREIN IS THE PROPRIETARY PROPERTY OF APPLE COMPUTER, INC. THE POSSESSOR AGREES TO THE FOLLOWING
I TO MAINTAIN THE DOCUMENT IN CONFIDENCE
II NOT TO REPRODUCE OR COPY IT
III NOT TO REVEAL OR PUBLISH IN WHOLE OR PART

APPLE COMPUTER INC.

SIZE	DRAWING NUMBER	REV.
D	051-6790	E
SCALE NONE	SHT 19 OF 154	

DRAWING

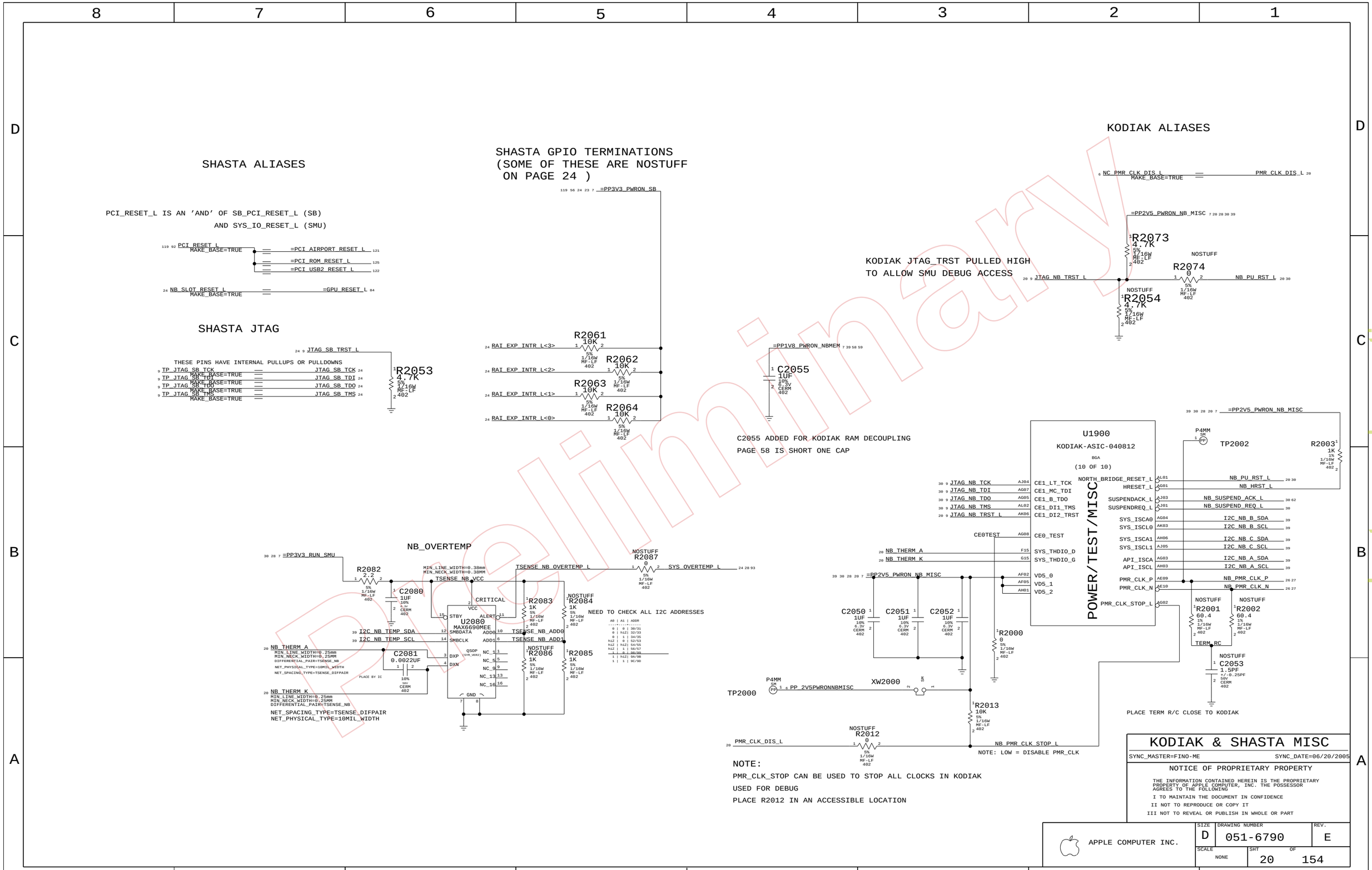

Preliminary
www.laptop-schematics.com

Page Notes

Power aliases required by this page:
- =PP3V3_PWRON_SB_PCI64 (VIO1) (TO 5V OR 3.3V)
- =PP3V3_PWRON_SB_PCI32 (VIO2) (TO 5V OR 3.3V)
- =PP3V3_PWRON_SB
- =PP2V5_PWRON_SB
- =PP1V2_PWRON_SB_VCORE

NOTE: PCI pads use the VIO supply to meet different drive timing characteristics required by the PCI spec for 5V vs. 3.3V operation. CONNECT VIO2 TO appropriate PCI bus voltage and VIO1 TO SAME IF 64-BIT PCI, otherwise 3.3V.

Signal aliases required by this page:
(NONE)

BOM options provided by this page:
(NONE)

Power Sequencing:
Must power Shasta VCore rail before any other Shasta supplies.

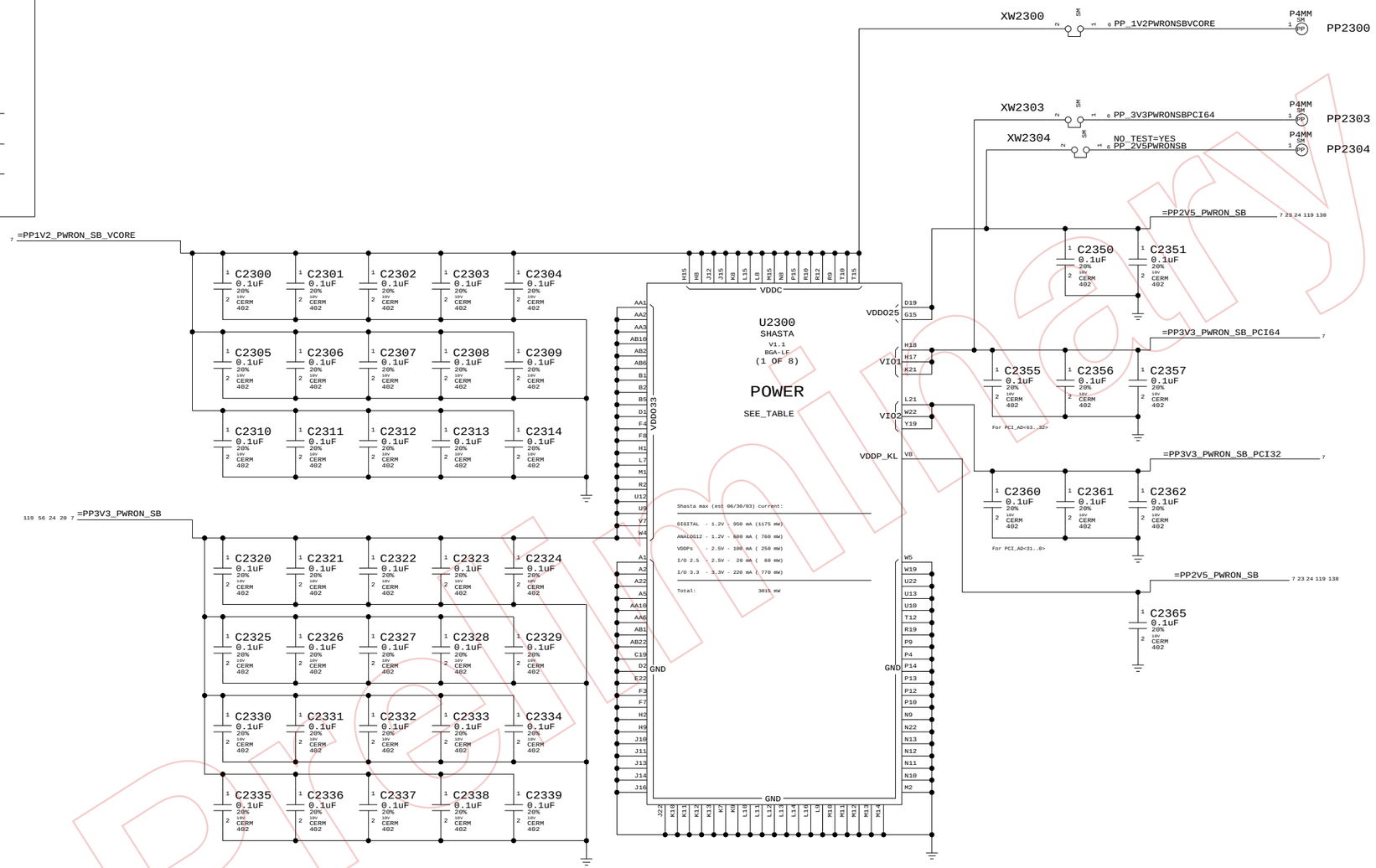

Preliminary

www.laptop-schematics.com

Shasta Core Power

SYNC_MASTER=Q63 SYNC_DATE=08/01/2005

NOTICE OF PROPRIETARY PROPERTY

THE INFORMATION CONTAINED HEREIN IS THE PROPRIETARY PROPERTY OF APPLE COMPUTER, INC. THE POSSESSOR AGREES TO THE FOLLOWING

I TO MAINTAIN THE DOCUMENT IN CONFIDENCE
II NOT TO REPRODUCE OR COPY IT
III NOT TO REVEAL OR PUBLISH IN WHOLE OR PART

APPLE COMPUTER INC.

SIZE	DRAWING NUMBER	REV.
D	051-6790	E
SCALE NONE	SHT 23 OF 154	

LAST_MODIFIED=Tue Nov 1 14:55:47 2005

DRAWING

ELECTRICAL_CONSTRAINT_SET	NET_SPACING_TYPE	DIFFERENTIAL_PAIR
I2S0_TO_SB		I2S0_DEV_TO_SB_DTI 24 147
I2S0_TO_DEV		I2S0_SB_TO_DEV_DTO 24 147
I2S0_TO_DEV	AUDIO	I2S0_MCLK 24 154
I2S0_BIDIR		I2S0_BITCLK 24 147
I2S0_BIDIR		I2S0_SYNC 24 147
I2S1_TO_SB		I2S1_DEV_TO_SB_DTI 8 24
I2S1_TO_DEV		I2S1_SB_TO_DEV_DTO 8 24
I2S1_TO_DEV	0.25mm SPACING	I2S1_MCLK 8 24
I2S1_BIDIR		I2S1_BITCLK 8 24
I2S1_BIDIR		I2S1_SYNC 8 24
I2S2_TO_SB		I2S2_DEV_TO_SB_DTI 24 154
I2S2_TO_DEV		I2S2_SB_TO_DEV_DTO 24 154
I2S2_TO_DEV	0.25mm SPACING	I2S2_MCLK 24 154
I2S2_BIDIR		I2S2_BITCLK 24 154
I2S2_BIDIR		I2S2_SYNC 24 154
SB_CLK18M_XTAL	0.38mm SPACING	SB_CLK18M_XTALI 24
	0.38mm SPACING	SB_CLK18M_XTALO 24
	0.38mm SPACING	SB_CLK18M_XTALO_R 24
SB_CLK25M_ATA	0.38mm SPACING	SB_CLK25M_SATA 24 26
	P3MM SPACING	NB_TO_SB_INT 24
	P3MM SPACING	SB_CPU_A0_INT_L 24
	P3MM SPACING	SB_CPU_A1_INT_L 24
	P3MM SPACING	SB_CPU_B0_INT_L 24
	P3MM SPACING	SB_CPU_B1_INT_L 24
	P3MM SPACING	PCI_AIRPORT_INT_L 24 121
	P3MM SPACING	PCI_USB2_INT_L 24 122
	P3MM SPACING	I2S0_RESET_L 24 147
	P3MM SPACING	I2S1_RESET_L 8 24
	P3MM SPACING	I2S2_RESET_L 24 154
	P3MM SPACING	MB_SLOT_RESET_L 24
	P3MM SPACING	NB_SLOT_RESET_L 20 24
	P3MM SPACING	SB_CPU_A0_SRESET_L 24 56
	P3MM SPACING	SB_CPU_A1_SRESET_L 24 56
	P3MM SPACING	SB_CPU_B0_SRESET_L 24 56
	P3MM SPACING	SB_CPU_B1_SRESET_L 24 56

Page Notes

Power aliases required by this page:
- _P3V3_PCI
- _P3V3_PWRON_SB
- _PP2V5_PWRON_SB
- _PP1V2_PWRON_SB

Signal aliases required by this page: (NONE)

BOM options provided by this page:
- PCI_64BIT: Configures Shasta for 64-bit PCI
  NOTE: XGC required for Shasta GPIOs
- MPIC_NB/MPIC_SB: Selects whether NorthBridge or SouthBridge MPIC will be used for interrupt controller.

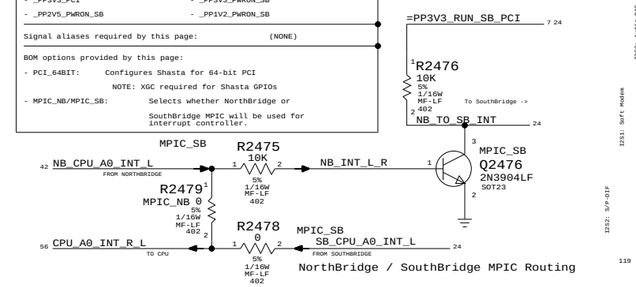

NorthBridge / SouthBridge MPIC Routing

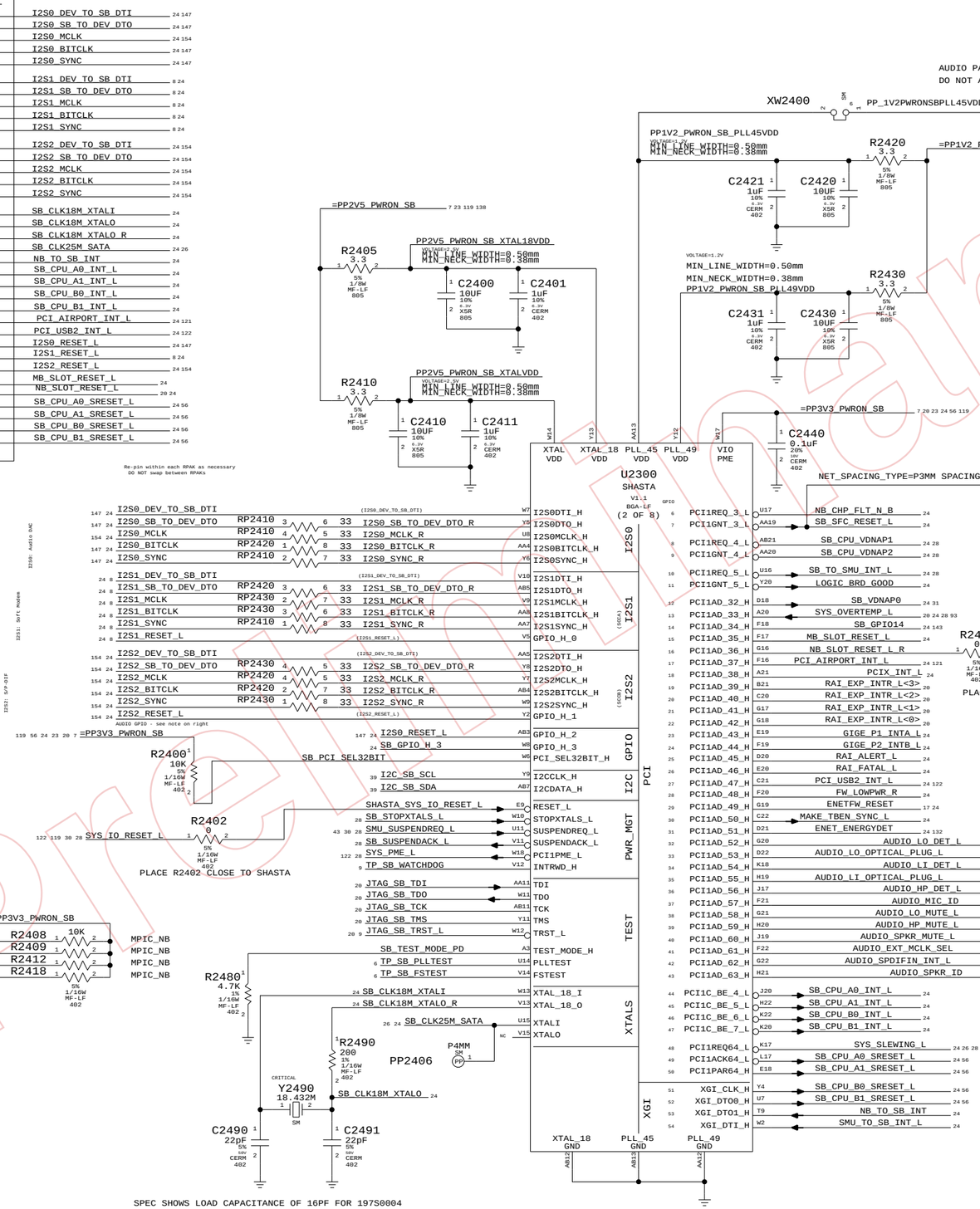

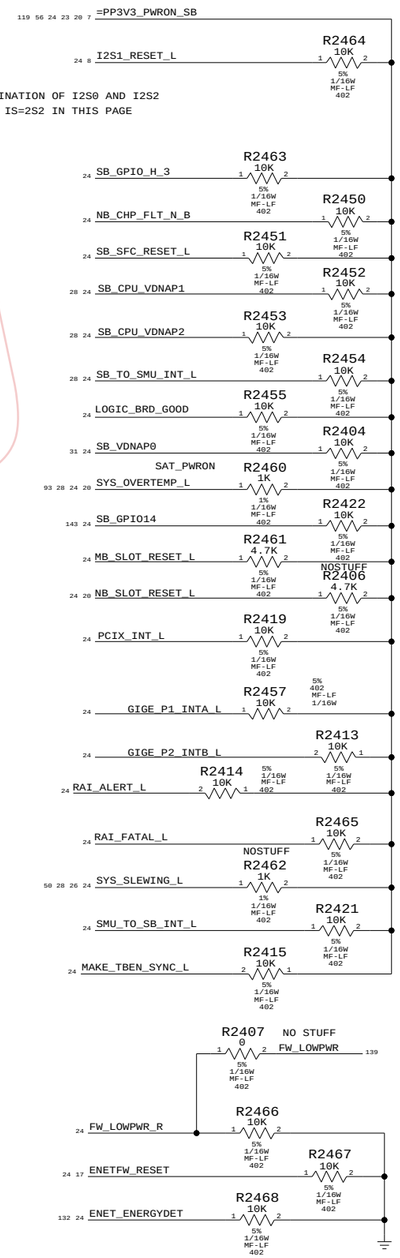

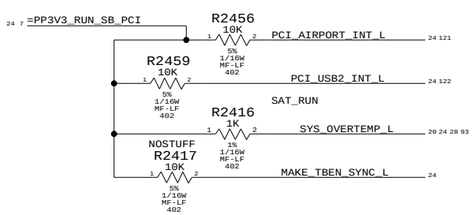

Shasta Serial / Misc

SYNC_MASTER=FINO-ME SYNC_DATE=06/20/2005

NOTICE OF PROPRIETARY PROPERTY

THE INFORMATION CONTAINED HEREIN IS THE PROPRIETARY PROPERTY OF APPLE COMPUTER, INC. THE POSSESSOR AGREES TO THE FOLLOWING

I TO MAINTAIN THE DOCUMENT IN CONFIDENCE

II NOT TO REPRODUCE OR COPY IT

III NOT TO REVEAL OR PUBLISH IN WHOLE OR PART

APPLE COMPUTER INC.

SIZE	DRAWING NUMBER	REV.
D	051-6790	E
SCALE NONE	SHT 24 OF 154	

LAST_MODIFIED=Tue Nov 1 14:55:48 2005

DRAWING

Preliminary

www.laptop-schematics.com

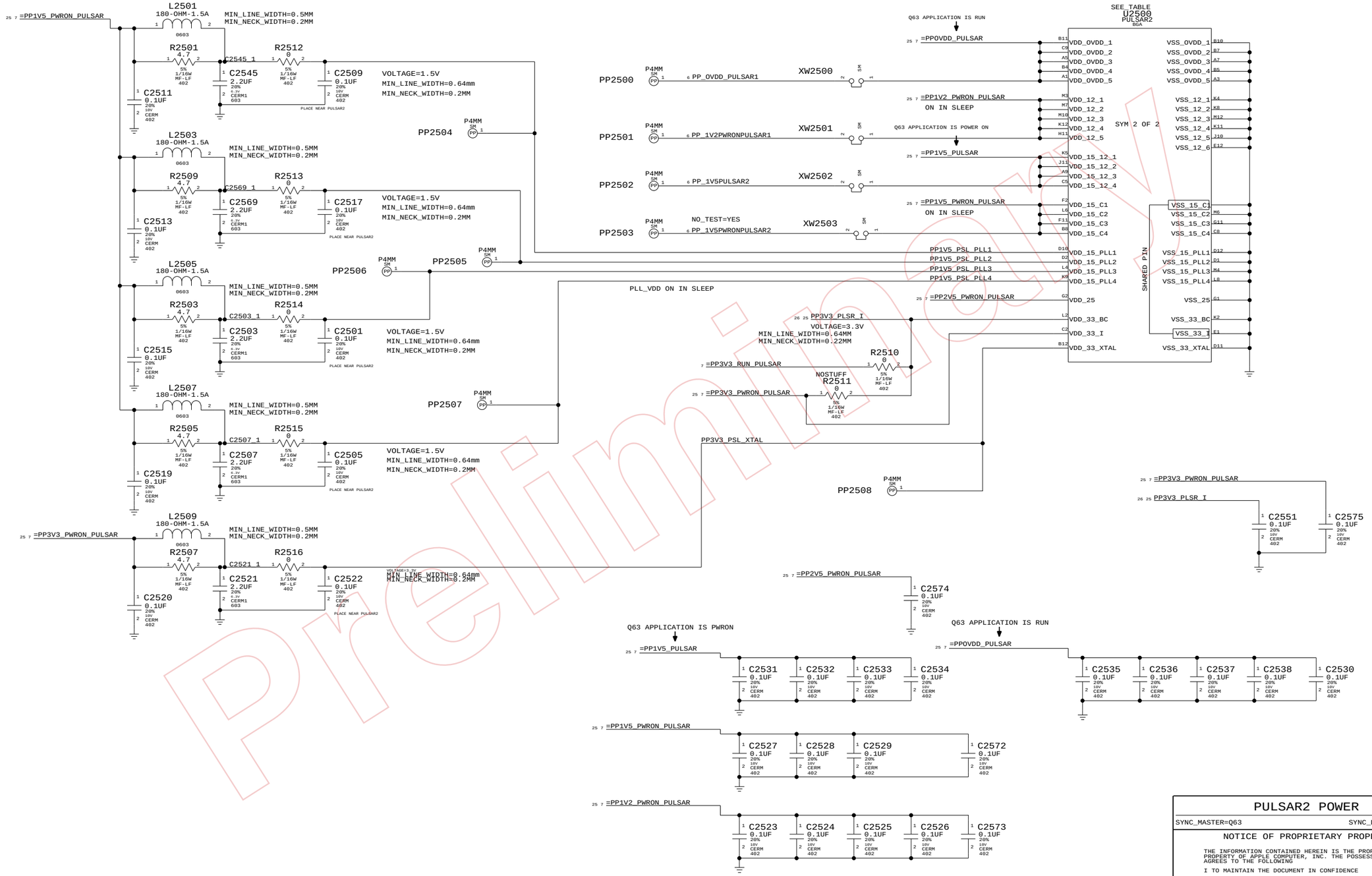

PULSAR2 POWER

SYNC_MASTER=Q63 SYNC_DATE=08/01/2005

NOTICE OF PROPRIETARY PROPERTY

THE INFORMATION CONTAINED HEREIN IS THE PROPRIETARY PROPERTY OF APPLE COMPUTER, INC. THE POSSESSOR AGREES TO THE FOLLOWING

I TO MAINTAIN THE DOCUMENT IN CONFIDENCE

II NOT TO REPRODUCE OR COPY IT

III NOT TO REVEAL OR PUBLISH IN WHOLE OR PART

APPLE COMPUTER INC.

SIZE	DRAWING NUMBER	REV.
D	051-6790	E

SCALE NONE SHT 25 OF 154

LAST_MODIFIED=Tue Nov 1 14:55:49 2005

DRAWING

Preliminary

www.laptop-schematics.com

PLACE ALL 0-OHM SERIES RESISTORSRES
ON THIS PAGE NEAR PULSAR

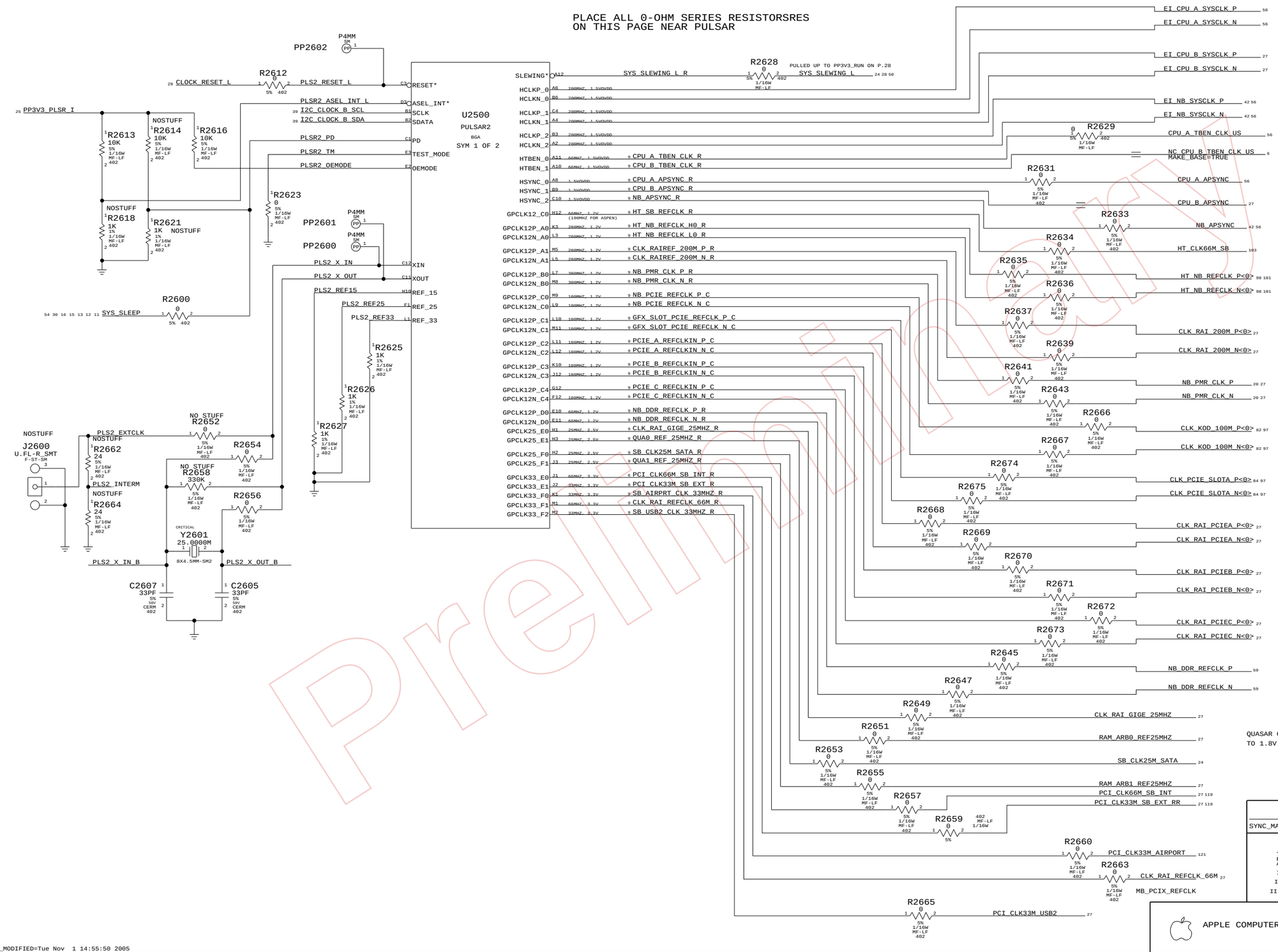

Preliminary
www.laptop-schematics.com

N/C ALIASES

N/C RAINIER CLOCKS

6 NC_CLK_RAI_REFCLK_66M — CLK_RAI_REFCLK_66M 26
MAKE_BASE=TRUE

6 NC_CLK_RAI_GIGE_25MHZ — CLK_RAI_GIGE_25MHZ 26
MAKE_BASE=TRUE

6 NC_CLK_RAI_200M_P<0> — CLK_RAI_200M_P<0> 26
MAKE_BASE=TRUE

6 NC_CLK_RAI_200M_N<0> — CLK_RAI_200M_N<0> 26
MAKE_BASE=TRUE

6 NC_CLK_RAI_PCIEA_P<0> — CLK_RAI_PCIEA_P<0> 26
MAKE_BASE=TRUE

6 NC_CLK_RAI_PCIEA_N<0> — CLK_RAI_PCIEA_N<0> 26
MAKE_BASE=TRUE

6 NC_CLK_RAI_PCIEB_P<0> — CLK_RAI_PCIEB_P<0> 26
MAKE_BASE=TRUE

6 NC_CLK_RAI_PCIEB_N<0> — CLK_RAI_PCIEB_N<0> 26
MAKE_BASE=TRUE

6 NC_CLK_RAI_PCIEC_P<0> — CLK_RAI_PCIEC_P<0> 26
MAKE_BASE=TRUE

6 NC_CLK_RAI_PCIEC_N<0> — CLK_RAI_PCIEC_N<0> 26
MAKE_BASE=TRUE

N/C CPUB CLOCKS

6 NC_EI_CPU_B_SYSCLK_P — EI_CPU_B_SYSCLK_P 26
MAKE_BASE=TRUE

6 NC_EI_CPU_B_SYSCLK_N — EI_CPU_B_SYSCLK_N 26
MAKE_BASE=TRUE

6 NC_CPU_B_APSYNC — CPU_B_APSYNC 26
MAKE_BASE=TRUE

N/C QUASAR CLOCKS

6 NC_RAM_ARB0_REF25MHZ — RAM_ARB0_REF25MHZ 26
MAKE_BASE=TRUE

6 NC_RAM_ARB1_REF25MHZ — RAM_ARB1_REF25MHZ 26
MAKE_BASE=TRUE

CLOCK CONSTRAINTS

	DIFFERENTIAL_PAIR	NET_PHYSICAL_TYPE	NET_SPACING_TYPE	ELECTRICAL_CONSTAINT_SET	
26 20 NB_PMR_CLK_P	NB_PMR_CLK	NB_PMR_CLK	NB_PMR_CLK_SP	NB_PMR_CLK	167
26 20 NB_PMR_CLK_N	NB_PMR_CLK	NB_PMR_CLK	NB_PMR_CLK_SP	NB_PMR_CLK	168
119 26 PCI_CLK66M_SB_INT		PCI_CLK_SB	P3MM SPACING	PCI_CLK_SB	169
119 26 PCI_CLK33M_SB_EXT_RR		PCI_CLK_SB	PCI_CLK_SB	PCI_CLK_SB_CAP	170

NOTE:
ALL OTHER CLOCK CONTRAINTS ON THEIR
RESPECTIVE BUS PAGES

26 PCI_CLK33M_USB2 — =PCI_CLK33M_USB2 122
MAKE_BASE=TRUE

Preliminary

www.laptop-schematics.com

Pulsar Aliases

SYNC_MASTER=FINO-ME SYNC_DATE=06/20/2005

NOTICE OF PROPRIETARY PROPERTY

THE INFORMATION CONTAINED HEREIN IS THE PROPRIETARY PROPERTY OF APPLE COMPUTER, INC. THE POSSESSOR AGREES TO THE FOLLOWING

I TO MAINTAIN THE DOCUMENT IN CONFIDENCE
II NOT TO REPRODUCE OR COPY IT
III NOT TO REVEAL OR PUBLISH IN WHOLE OR PART

APPLE COMPUTER INC.

SIZE	DRAWING NUMBER	REV.
D	051-6790	E
SCALE NONE	SHT 27 OF 154	

ELECTRICAL_CONSTRAINT_SET	NET_SPACING_TYPE	DIFFERENTIAL_PAIR	
SMU_CLK10M_XTAL	0.38MM SPACING		SMU_CLK10M_XIN 28
	0.38MM SPACING		SMU_CLK10M_XOUT 28
	0.38MM SPACING		SMU_CLK10M_XOUT_R 28
RTC_CLK32K_XTAL	0.38MM SPACING		RTC_CLK32K_X1 28
	0.38MM SPACING		RTC_CLK32K_X2 28
	P3MM SPACING		SMU_IO_RESET_L 28 30
	0.25MM SPACING		SYS_NORTH_RESET_L 28 30

ELECTRICAL_CONSTRAINT_SET	NET_SPACING_TYPE	DIFFERENTIAL_PAIR	
MAKE_BASE=TRUE SMU_RESET	0.25MM SPACING		SYS_NORTH_RESET_L 28 30
MAKE_BASE=TRUE SMU_RESET	0.25MM SPACING		SYS_IO_RESET_L 24 30 119 122
MAKE_BASE=TRUE	P3MM SPACING		CLOCK_RESET_L 26 28
MAKE_BASE=TRUE	P3MM SPACING		SYS_RESET_BUTTON_L 28 29

Page Notes

Power aliases required by this page:
- =PP3V3_ALL_SMU
- =PP3V3_ALL_RTC
- =PP3V3_PWRON_SMU
- =PPVREF_SMU (SMU AVCC OR 2.5V REFERENCE)

Signal aliases required by this page:
(NONE)

BOM options provided by this page:
(NONE)

NOTE: CPU current/voltage monitoring (CPU_SENSE_I/CPU_SENSE_V) requires 100K/10uF RC filter at SMU pins. Caps should connect to GND_SMU_AVSS. SMU_VREF should be same signal or reference used by monitoring circuit, but be aware that this will affect other analog inputs such as AC adapter ID.

NOTE: All analog inputs to SMU should have a 100pF capacitor to the SMU AVSS signal (GND_SMU_AVSS). None of those capacitors are provided on this page.

NOTE: Some primary and alternate functions reuire pull-ups that are not. provided on this page. Please. review the latest SMU specification to ensure missing pull-ups are provided on another page.

NOTE: Pinout matches SMU pinout v1.51.

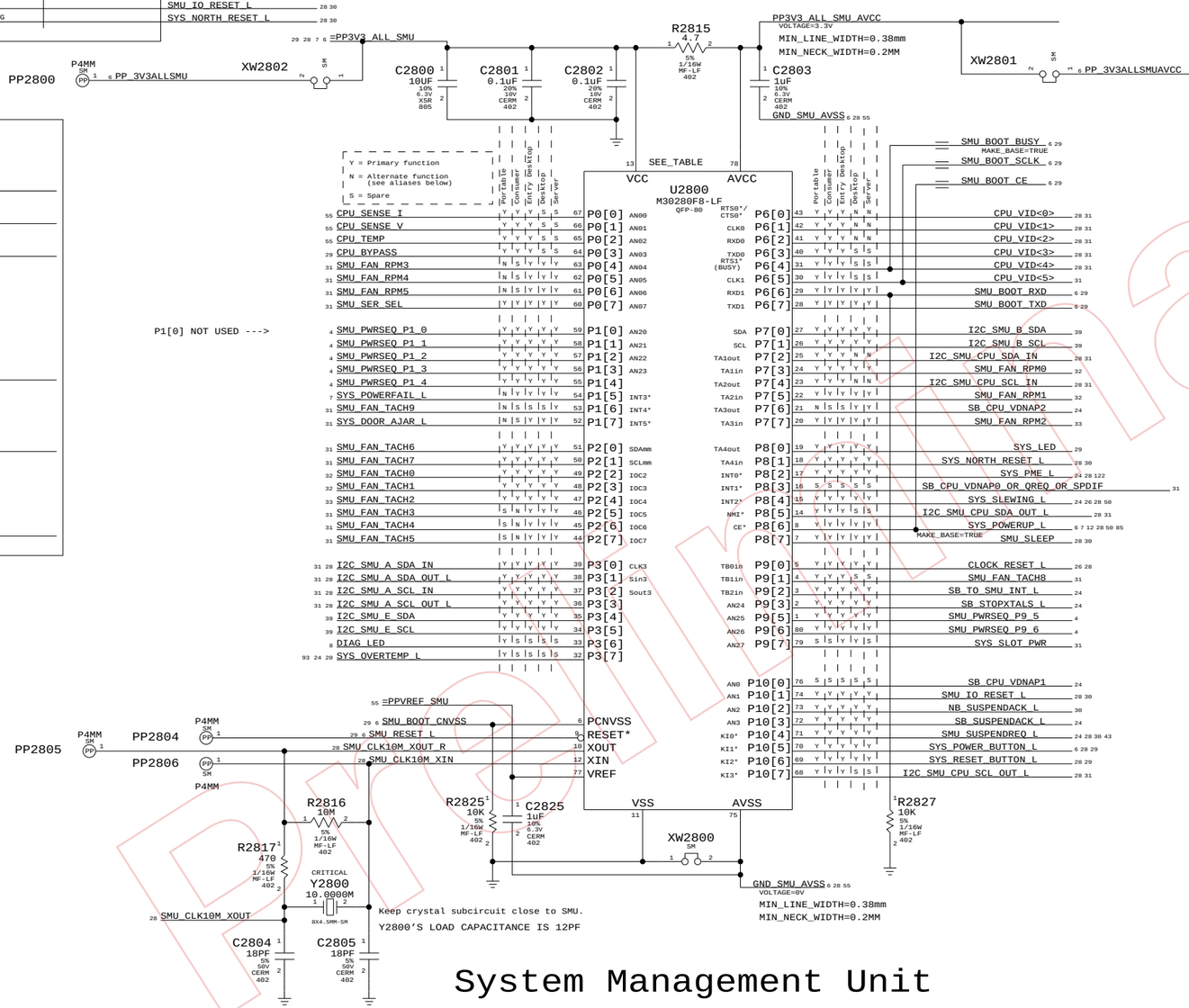

System Management Unit

Real Time Clock

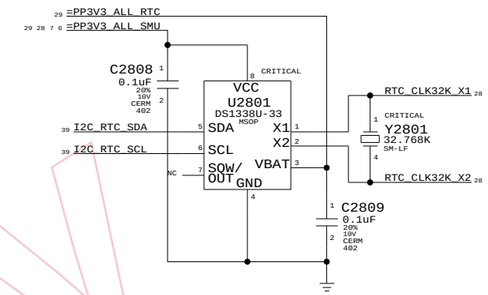

SMU Pull-ups / pull-down

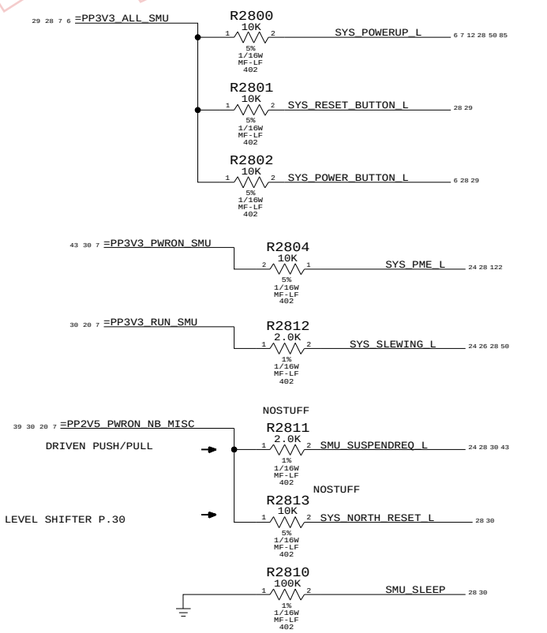

Alternate Functions

Tower & Server

	Port		
31 28 CPU_VID<0>	6.0		SAT_MRESET_L
31 28 CPU_VID<1>	6.1		CPU_A_INSERTED_L
31 28 CPU_VID<2>	6.2		CPU_B_INSERTED_L
31 28 I2C_SMU_CPU_SDA_IN	7.2		SMU_FAN_PWM8
31 28 I2C_SMU_CPU_SCL_IN	7.4		SMU_FAN_PWM9
31 28 I2C_SMU_A_SDA_IN	3.0		I2C_SMU_A_SDA 31 39
31 28 I2C_SMU_A_SDA_OUT_L	3.1		I2C_SMU_A_SCL 31 39

	Port		
31 28 CPU_VID<3>	6.3		SMU_FAN_RPM6
31 28 CPU_VID<4>	6.4		SMU_FAN_RPM7
31 28 I2C_SMU_A_SCL_IN	3.2		NB_TDI
31 28 I2C_SMU_A_SCL_OUT_L	3.3		NB_TCK
31 28 I2C_SMU_CPU_SDA_OUT_L	8.5		NB_TMS
31 28 I2C_SMU_CPU_SCL_OUT_L	10.7		NB_TDO_SMU

System Management Unit

SYNC_MASTER=Q63 SYNC_DATE=08/01/2005

NOTICE OF PROPRIETARY PROPERTY

THE INFORMATION CONTAINED HEREIN IS THE PROPRIETARY PROPERTY OF APPLE COMPUTER, INC. THE POSSESSOR AGREES TO THE FOLLOWING

I TO MAINTAIN THE DOCUMENT IN CONFIDENCE
II NOT TO REPRODUCE OR COPY IT
III NOT TO REVEAL OR PUBLISH IN WHOLE OR PART

APPLE COMPUTER INC.

SIZE	DRAWING NUMBER	REV.
D	051-6790	E
SCALE NONE	SHT 28 OF 154	

LAST_MODIFIED=Tue Nov 1 14:55:51 2005

DRAWING

Preliminary
www.laptop-schematics.com

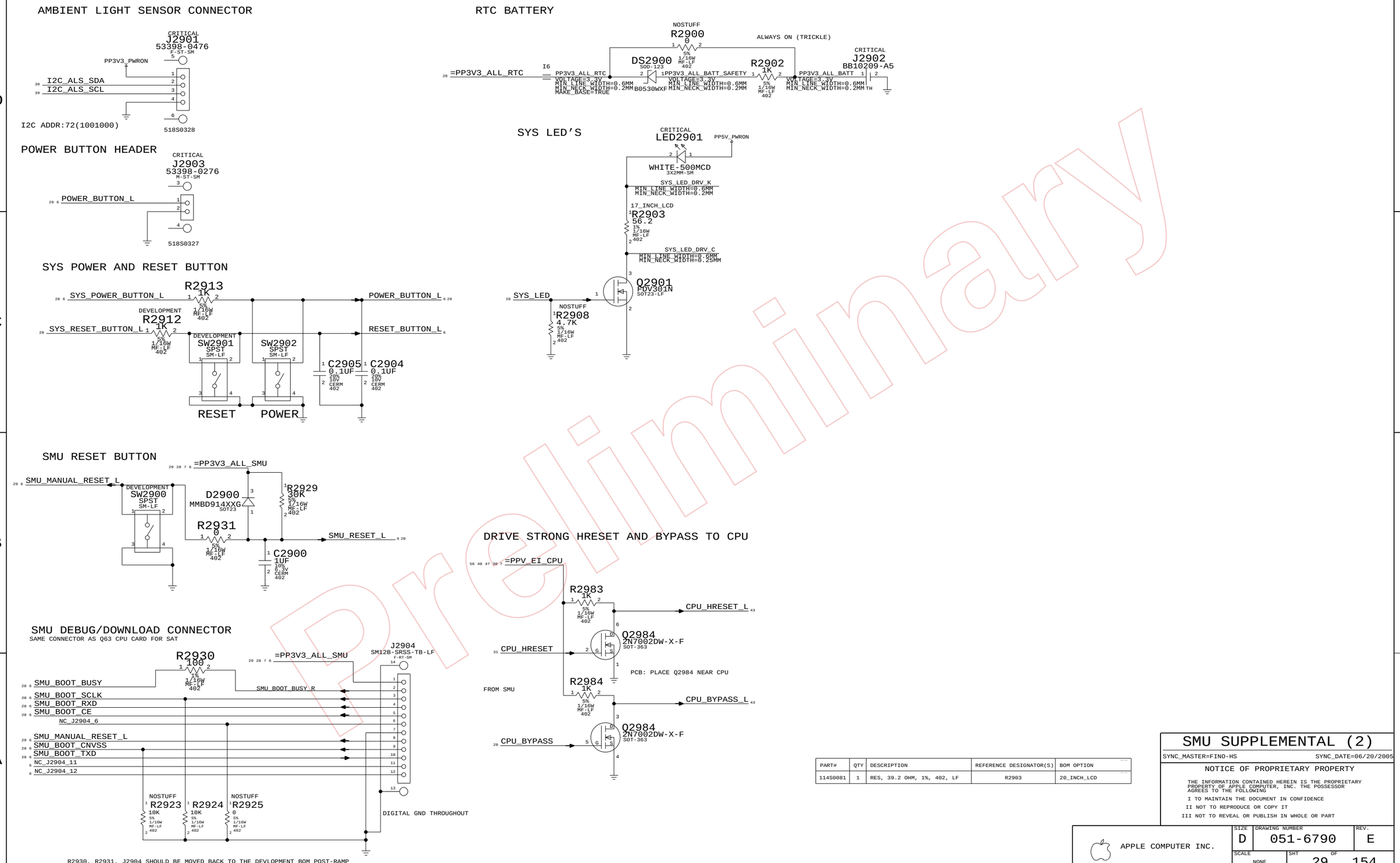

PART#	QTY	DESCRIPTION	REFERENCE DESIGNATOR(S)	BOM OPTION
114S0081	1	RES, 39.2 OHM, 1%, 402, LF	R2903	20_INCH_LCD

SMU SUPPLEMENTAL (2)

SYNC_MASTER=FINO-HS SYNC_DATE=06/20/2005

NOTICE OF PROPRIETARY PROPERTY

THE INFORMATION CONTAINED HEREIN IS THE PROPRIETARY PROPERTY OF APPLE COMPUTER, INC. THE POSSESSOR AGREES TO THE FOLLOWING

I TO MAINTAIN THE DOCUMENT IN CONFIDENCE

II NOT TO REPRODUCE OR COPY IT

III NOT TO REVEAL OR PUBLISH IN WHOLE OR PART

APPLE COMPUTER INC.

SIZE	DRAWING NUMBER	REV.
D	051-6790	E

SCALE NONE SHT 29 OF 154

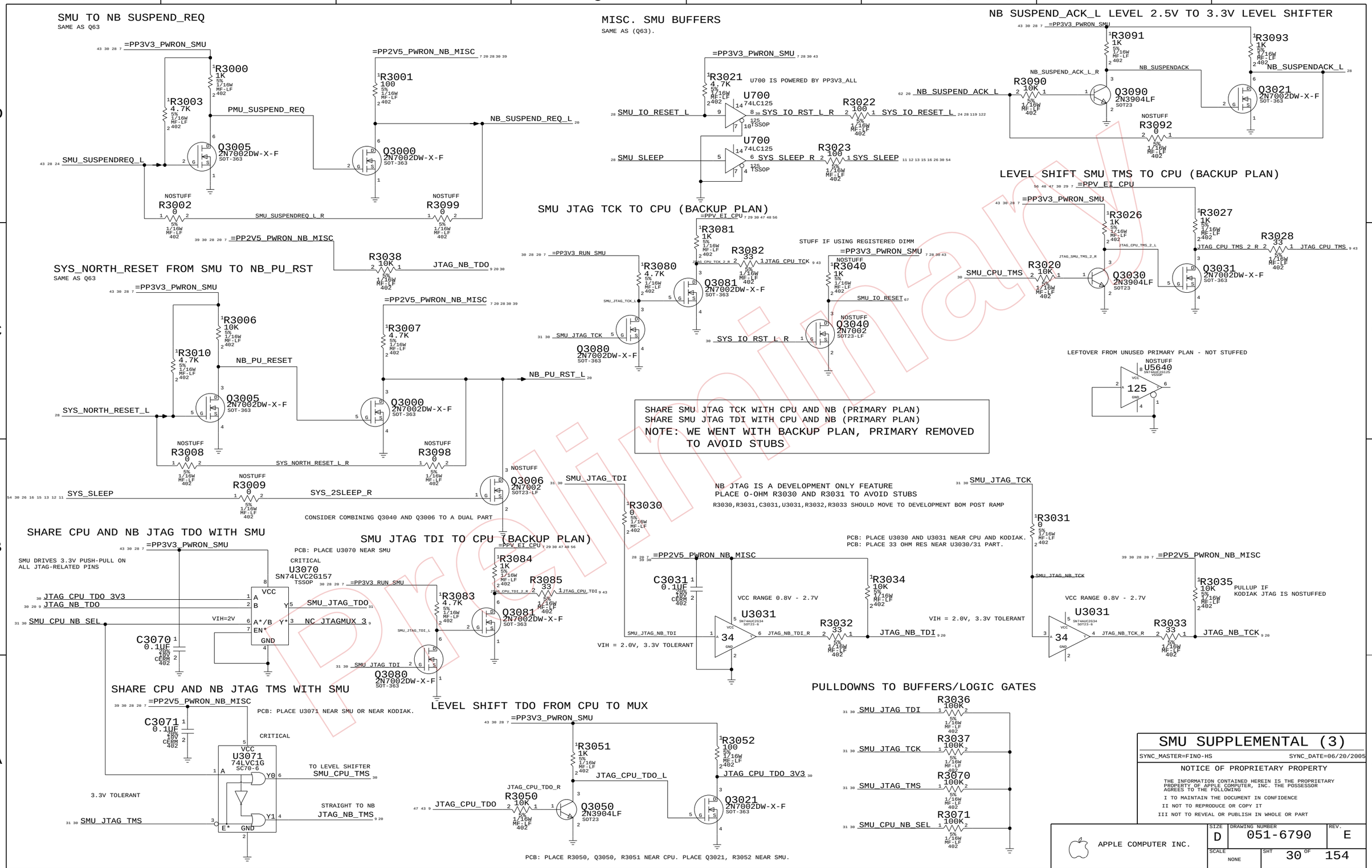

www.laptop-schematics.com

SMU ALIASES

ALIASES ARE ONLY NECESSARY WHERE USE DIFFERS FROM Q63.

COMMENT (ONLY IF USE DIFFERS FROM Q63)	M23 NET NAME	M23 SMU ALLOCATION		Q63 NET NAME (SHARED PAGE)
		CPU_SENSE_I0	P0.0	
		CPU_SENSE_V0	P0.1	
Q63 NC'S THESE AS IT USES A SAT.		CPU_TEMP0	P0.2	
		CPU_BYPASS	P0.3	
M23/M33 DOESN'T HAVE THOSE FANS.	9 NC_SMU_FAN_RPM3	FAN_CNTL0_4	P0.4	SMU_FAN_RPM3 28
	9 NC_SMU_FAN_RPM4	FAN_CNTL0_5	P0.5	SMU_FAN_RPM4 28
	9 NC_SMU_FAN_RPM5	FAN_CNTL0_6	P0.6	SMU_FAN_RPM5 28
Q63 USES SMU_SER_SEL FOR SPDIF-SMU-DEBUG. NOT M23/M33 FEATURE.	9 NC_SMU_SER_SEL	SMU_SCCL_SEL	P0.7	SMU_SER_SEL 28
M23/M33 DOESN'T USE. P1.0 NC ON PG 7.		CPU_SENSE_I1	P1.0	
		CPU_SENSE_V1	P1.1	
SMU USES P1.1, P1.2, P1.3, P9.5, P9.6 FOR PWRSEQ ON PG 7.		CPU_TEMP1	P1.2	
		PS1_3	P1.3	
M23/M33 DOESN'T USE P1.4. NC ON PG 7.		PS1_4	P1.4	
		POWERFAIL*	P1.5	
CPU_VID_LE0 FOR Q82. NOT M23/M33 FEATURE.	9 NC_SMU_CPU_VID_LE0	CPU_VID_LE0	P1.6	SMU_FAN_TACH9 28
CONSIDER DOOR_AJAR FOR M23/M33 DIMM ACCESS DOOR?	9 NC_SYS_DOOR_AJAR_L	DOOR_AJAR*	P1.7	SYS_DOOR_AJAR_L 28
CPU_VID_LE1 FOR Q82. NOT M23/M33 FEATURE.	9 NC_SMU_CPU_VID_LE1	CPU_VID_LE1	P2.0	SMU_FAN_TACH6 28
M23/M33 DOESN'T HAVE THIS FAN.	9 NC_SMU_FAN_TACH7	FAN_TACH2_1	P2.1	SMU_FAN_TACH7 28
		FAN_TACH2_2	P2.2	
		FAN_TACH2_3	P2.3	
		FAN_TACH2_4	P2.4	
M23/M33 DOESN'T HAVE FAN TACHS P2.5, P2.6, P2.7.	9 NC_SMU_FAN_TACH3	FAN_TACH2_5	P2.5	SMU_FAN_TACH3 28
M23/M33 USES TACH0 (P2.2), TACH1 (P2.3), TACH2 (P2.4) ONLY.	9 NC_SMU_FAN_TACH4	FAN_TACH2_6	P2.6	SMU_FAN_TACH4 28
	9 NC_SMU_FAN_TACH5	FAN_TACH2_7	P2.7	SMU_FAN_TACH5 28
M23/M33 ONLY CONNECTS I2C TO KODIAK NOW; CPU HAS PULLUPS ON ITS PG.	39 28 I2C_SMU_A_SDA	IIC_A_DAT	P3.0	I2C_SMU_A_SDA_IN 28
	39 28 I2C_SMU_A_SCL	IIC_A_CLK	P3.1	I2C_SMU_A_SDA_OUT_L 28
	39 SMU_JTAG_TDI	TDI	P3.2	I2C_SMU_A_SCL_IN 28
	39 SMU_JTAG_TCK	TCK	P3.3	I2C_SMU_A_SCL_OUT_L 28
		IIC_E_DAT	P3.4	
		IIC_E_CLK	P3.5	
		DIAG_LED	P3.6	
		OVERTEMP*	P3.7	
		CPU_VID[0]	P6.0	
		CPU_VID[1]	P6.1	
		CPU_VID[2]	P6.2	
		CPU_VID[3]	P6.3	
		CPU_VID[4]	P6.4	
		CPU_VID[5]	P6.5	
		DEBUG_RXD	P6.6	
		DEBUG_TXD	P6.7	
		IIC_B_DAT	P7.0	
		IIC_B_CLK	P7.1	
Q63 USE OF P7.2 IS PWM FAN SELECT BETWEEN CPU OR NB TMS AND TDO FROM/TO SMU	38 SMU_CPU_NB_SEL	CPU_TMS	P7.2	I2C_SMU_CPU_SDA_IN 28
		FAN_CNTL7_3	P7.3	
M23/M33 DOESN'T HAVE THIS FAN (P7.4)	9 NC_I2C_SMU_CPU_SCL_IN	FAN_CNTL7_4	P7.4	I2C_SMU_CPU_SCL_IN 28
M23/M33 USES FAN_RPM0 (P7.3), FAN_RPM1 (P7.5), FAN_RPM2 (P7.7) ONLY.		FAN_CNTL7_5	P7.5	
		VDNAP2	P7.6	
		FAN_CNTL7_7	P7.7	
		SYSTEM_LED	P8.0	
		NB_RESET*	P8.1	
		PME*	P8.2	
M23/M33 DOESN'T NEED TO MAKE VDNAP0 DO TRIPLE-DUTY.	24 SB_VDNAP0	VDNAP0	P8.3	SB_CPU_VDNAP0_OR_OREQ_OR_SPDIF 28
		SLEWING*	P8.4	
	39 SMU_JTAG_TMS	NB_TMS	P8.5	I2C_SMU_CPU_SDA_OUT_L 28
		POWERUP*	P8.6	
		SLEEP	P8.7	
		CLK_RESET*	P9.0	
Q63 USE OF P9.1 IS TACH 8.	29 CPU_HRESET	CPU_HRESET	P9.1	SMU_FAN_TACH8 28
		SMU_DOORBELL*	P9.2	
		STOP_XTAL*	P9.3	
SMU USES P1.1, P1.2, P1.3, P9.5, P9.6 FOR PWRSEQ ON PG 7.		PS9_5	P9.5	
		PS9_6	P9.6	
M23/M33 HAS NO SLOTS.	9 NC_SLOT_TOTAL_PWR	SLOT_TOTAL_PWR	P9.7	SYS_SLOT_PWR 28
		VDNAP1	P10.0	
		IO_RESET*	P10.1	
		SUSPEND_ACK*	P10.2	
		SUSPEND_IO_ACK*	P10.3	
		SUSPEND_REQ*	P10.4	
		PWR_BUTTON*	P10.5	
		RST_BUTTON*	P10.6	
	39 SMU_JTAG_TDO	TDO	P10.7	I2C_SMU_CPU_SCL_OUT_L 28

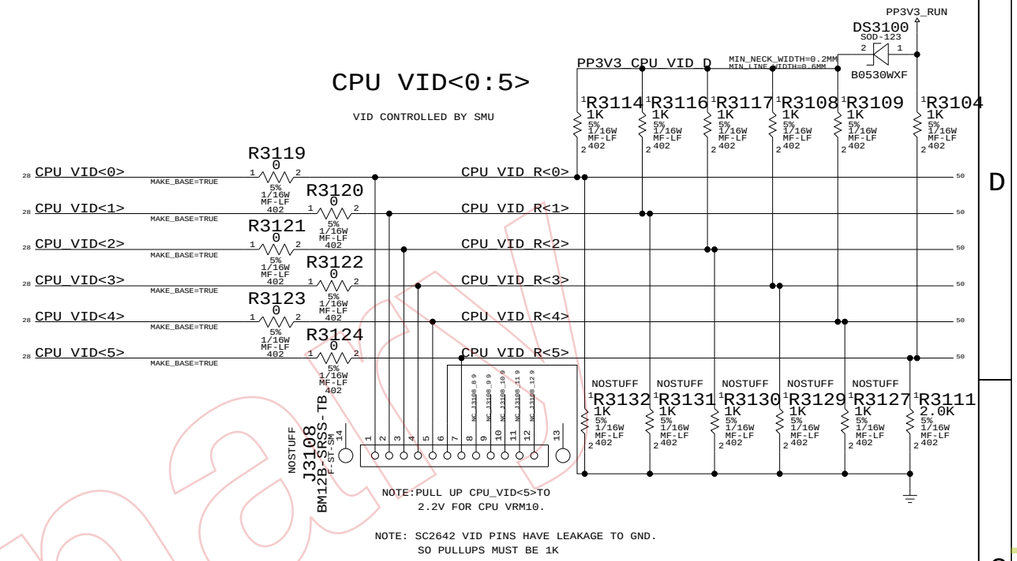

SMU SUPPLEMENTAL (4)

SYNC_MASTER=FINO-HS SYNC_DATE=06/20/2005

NOTICE OF PROPRIETARY PROPERTY

THE INFORMATION CONTAINED HEREIN IS THE PROPRIETARY PROPERTY OF APPLE COMPUTER, INC. THE POSSESSOR AGREES TO THE FOLLOWING

I TO MAINTAIN THE DOCUMENT IN CONFIDENCE

II NOT TO REPRODUCE OR COPY IT

III NOT TO REVEAL OR PUBLISH IN WHOLE OR PART

APPLE COMPUTER INC.

SIZE	DRAWING NUMBER	REV.
D	051-6790	E
SCALE NONE	SHT 31 OF 154	

Preliminary

www.laptop-schematics.com

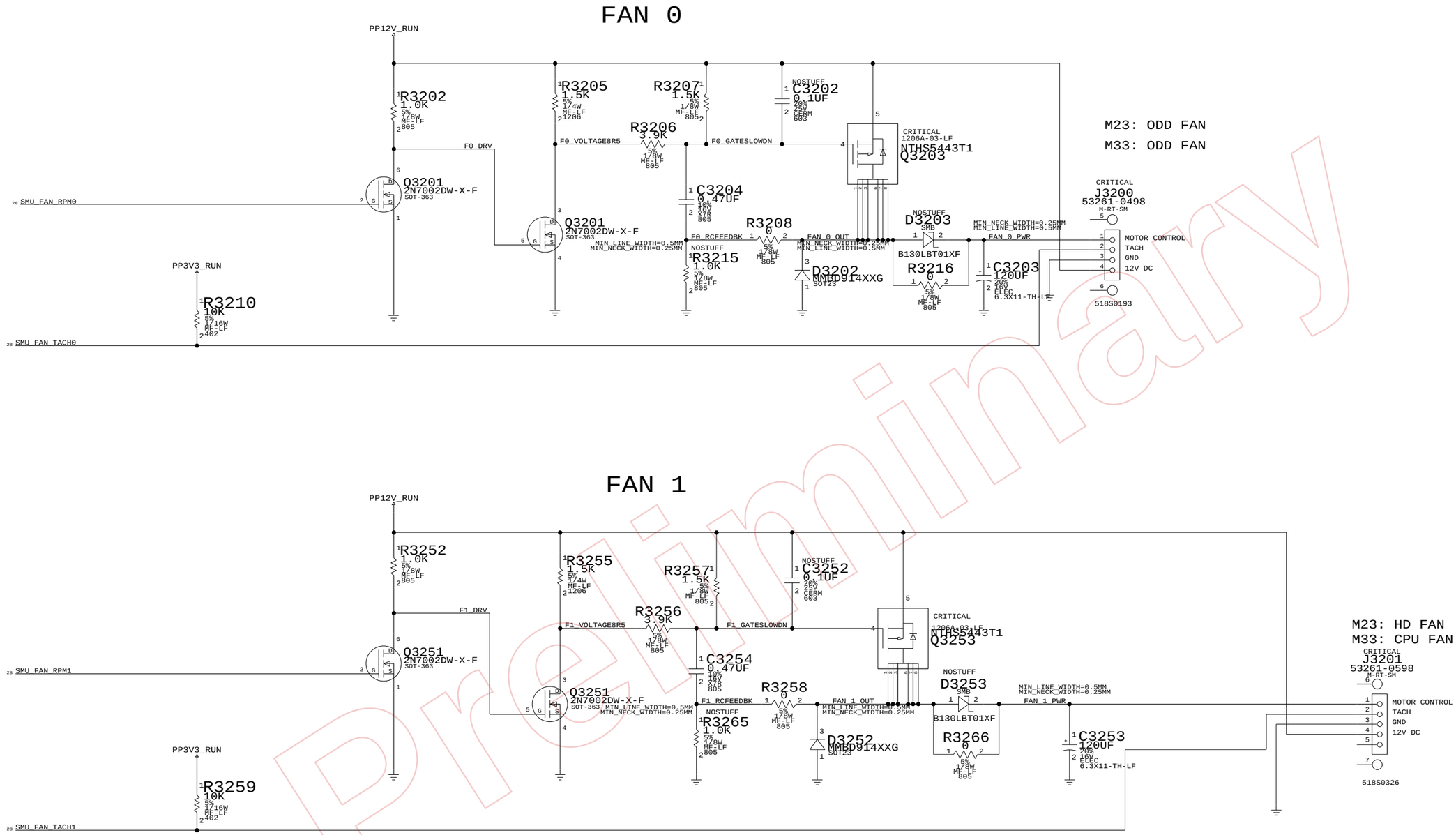

Fan 0, 1 & System Temp

SYNC_MASTER=FINO-HS SYNC_DATE=06/20/2005

NOTICE OF PROPRIETARY PROPERTY

THE INFORMATION CONTAINED HEREIN IS THE PROPRIETARY PROPERTY OF APPLE COMPUTER, INC. THE POSSESSOR AGREES TO THE FOLLOWING

I TO MAINTAIN THE DOCUMENT IN CONFIDENCE

II NOT TO REPRODUCE OR COPY IT

III NOT TO REVEAL OR PUBLISH IN WHOLE OR PART

APPLE COMPUTER INC.

SIZE	DRAWING NUMBER	REV.
D	051-6790	E
SCALE NONE	SHT 32 OF 154	

Preliminary

www.laptop-schematics.com

FAN 2

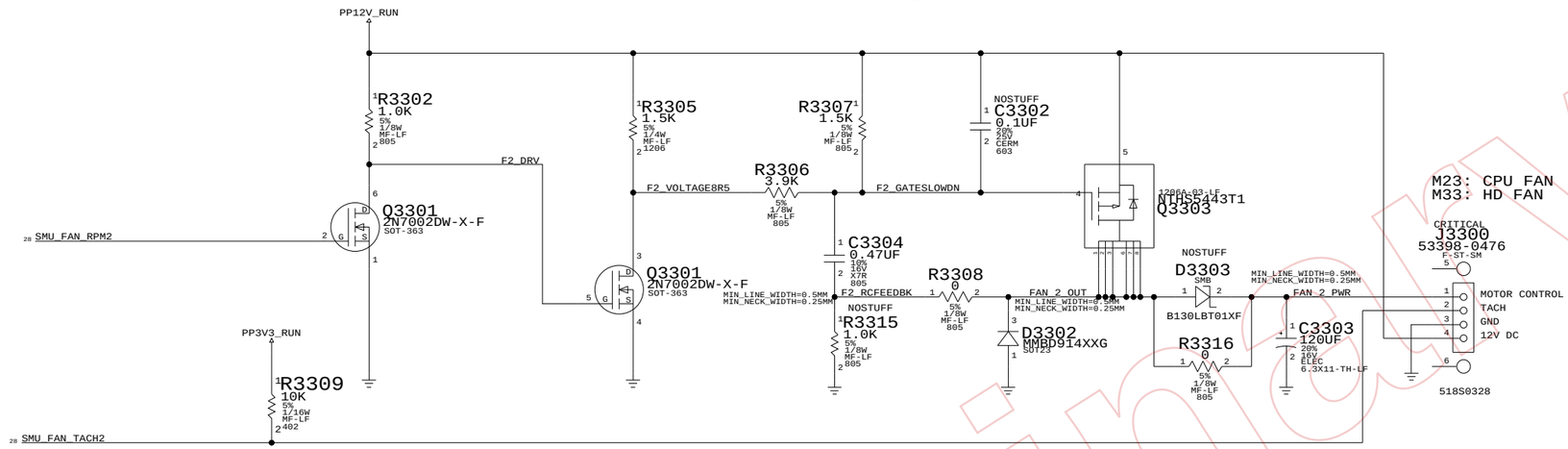

HD TEMP SENSOR

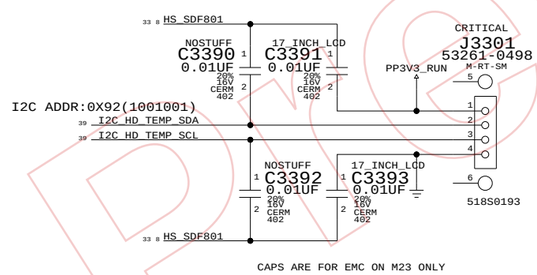

ODD TEMP SENSOR

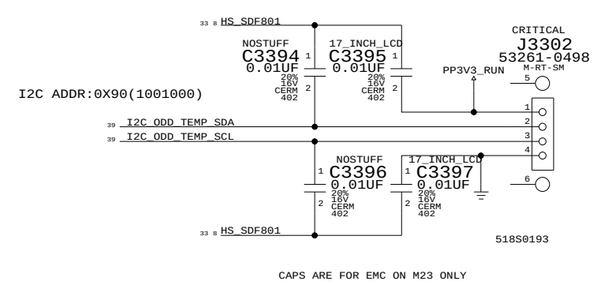

Fan 2 & HD Temp		
SYNC_MASTER=FINO-HS	SYNC_DATE=06/20/2005	

NOTICE OF PROPRIETARY PROPERTY

THE INFORMATION CONTAINED HEREIN IS THE PROPRIETARY PROPERTY OF APPLE COMPUTER, INC. THE POSSESSOR AGREES TO THE FOLLOWING

I TO MAINTAIN THE DOCUMENT IN CONFIDENCE

II NOT TO REPRODUCE OR COPY IT

III NOT TO REVEAL OR PUBLISH IN WHOLE OR PART

APPLE COMPUTER INC.	SIZE D	DRAWING NUMBER 051-6790	REV. E
	SCALE NONE	SHT 33 OF 154	

Preliminary

www.laptop-schematics.com

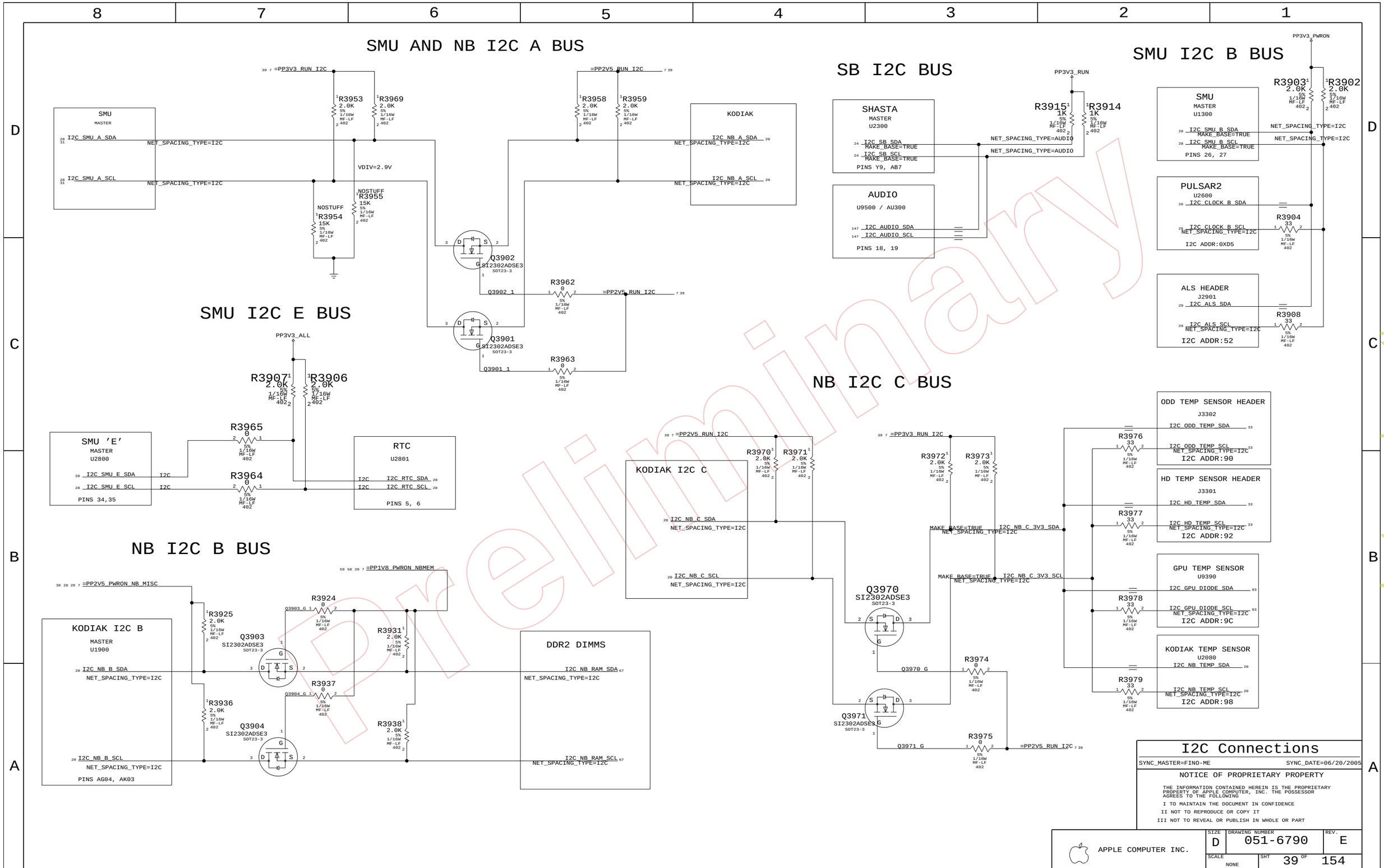
SMU AND NB I2C A BUS
SMU
MASTER
I2C_SMU_A_SDA
I2C_SMU_A_SCL
NET_SPACING_TYPE=I2C
=PP3V3_RUN_I2C
R3953 2.0K
R3969 2.0K
VDIV=2.9V
NOSTUFF
R3954 15K
R3955 15K
=PP2V5_RUN_I2C
R3958 2.0K
R3959 2.0K
KODIAK
I2C_NB_A_SDA
I2C_NB_A_SCL
Q3902 SI2302ADSE3 SOT23-3
Q3902_1
R3962 0
Q3901 SI2302ADSE3 SOT23-3
Q3901_1
R3963 0
SB I2C BUS
SHASTA
MASTER
U2300
I2C_SB_SDA
I2C_SB_SCL
MAKE_BASE=TRUE
PINS Y9, AB7
PP3V3_RUN
R3915 1K
R3914 1K
NET_SPACING_TYPE=AUDIO
AUDIO
U9500 / AU300
I2C_AUDIO_SDA
I2C_AUDIO_SCL
PINS 18, 19
SMU I2C B BUS
PP3V3_PWRON
R3903 2.0K
R3902 2.0K
SMU
MASTER
U1300
I2C_SMU_B_SDA
I2C_SMU_B_SCL
PINS 26, 27
PULSAR2
U2600
I2C_CLOCK_B_SDA
I2C_CLOCK_B_SCL
I2C ADDR:0XD5
R3904 33
ALS HEADER
J2901
I2C_ALS_SDA
I2C_ALS_SCL
I2C ADDR:52
R3908 33
SMU I2C E BUS
PP3V3_ALL
R3907 2.0K
R3906 2.0K
SMU 'E'
MASTER
U2800
I2C_SMU_E_SDA
I2C_SMU_E_SCL
PINS 34,35
R3965 0
R3964 0
RTC
U2801
I2C_RTC_SDA
I2C_RTC_SCL
PINS 5, 6
NB I2C C BUS
=PP2V5_RUN_I2C
R3970 2.0K
R3971 2.0K
KODIAK I2C C
I2C_NB_C_SDA
I2C_NB_C_SCL
=PP3V3_RUN_I2C
R3972 2.0K
R3973 2.0K
I2C_NB_C_3V3_SDA
I2C_NB_C_3V3_SCL
Q3970 SI2302ADSE3 SOT23-3
Q3970_G
R3974 0
Q3971 SI2302ADSE3 SOT23-3
Q3971_G
R3975 0
ODD TEMP SENSOR HEADER
J3302
I2C_ODD_TEMP_SDA
I2C_ODD_TEMP_SCL
I2C ADDR:90
R3976 33
HD TEMP SENSOR HEADER
J3301
I2C_HD_TEMP_SDA
I2C_HD_TEMP_SCL
I2C ADDR:92
R3977 33
GPU TEMP SENSOR
U9390
I2C_GPU_DIODE_SDA
I2C_GPU_DIODE_SCL
I2C ADDR:9C
R3978 33
KODIAK TEMP SENSOR
U2080
I2C_NB_TEMP_SDA
I2C_NB_TEMP_SCL
I2C ADDR:98
R3979 33
NB I2C B BUS
=PP2V5_PWRON_NB_MISC
=PP1V8_PWRON_NBMEM
KODIAK I2C B
MASTER
U1900
I2C_NB_B_SDA
I2C_NB_B_SCL
PINS AG04, AK03
R3925 2.0K
R3936 2.0K
Q3903 SI2302ADSE3 SOT23-3
Q3904 SI2302ADSE3 SOT23-3
R3924 0
R3937 0
R3931 2.0K
R3938 2.0K
DDR2 DIMMS
I2C_NB_RAM_SDA
I2C_NB_RAM_SCL
I2C Connections
SYNC_MASTER=FINO-ME
SYNC_DATE=06/20/2005
NOTICE OF PROPRIETARY PROPERTY
THE INFORMATION CONTAINED HEREIN IS THE PROPRIETARY PROPERTY OF APPLE COMPUTER, INC. THE POSSESSOR AGREES TO THE FOLLOWING
I TO MAINTAIN THE DOCUMENT IN CONFIDENCE
II NOT TO REPRODUCE OR COPY IT
III NOT TO REVEAL OR PUBLISH IN WHOLE OR PART
APPLE COMPUTER INC.
SIZE D
DRAWING NUMBER 051-6790
REV. E
SCALE NONE
SHT 39 OF 154
Preliminary
www.laptop-schematics.com

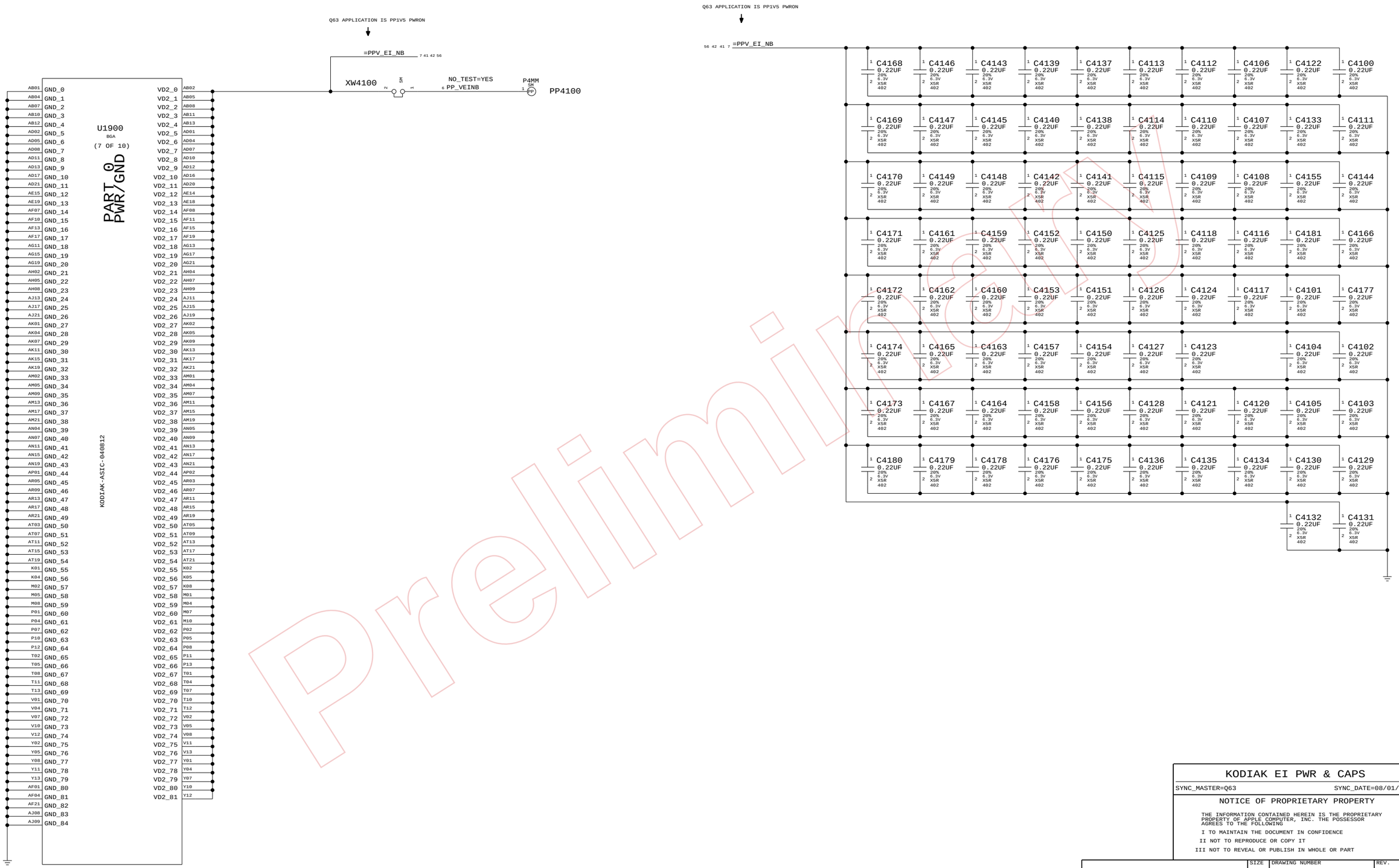

Preliminary

KODIAK EI PWR & CAPS

SYNC_MASTER=Q63 SYNC_DATE=08/01/2005

NOTICE OF PROPRIETARY PROPERTY

THE INFORMATION CONTAINED HEREIN IS THE PROPRIETARY PROPERTY OF APPLE COMPUTER, INC. THE POSSESSOR AGREES TO THE FOLLOWING

I TO MAINTAIN THE DOCUMENT IN CONFIDENCE

II NOT TO REPRODUCE OR COPY IT

III NOT TO REVEAL OR PUBLISH IN WHOLE OR PART

APPLE COMPUTER INC.

SIZE	DRAWING NUMBER	REV.
D	051-6790	E
SCALE NONE	SHT 41	OF 154

LAST_MODIFIED=Tue Nov 1 14:55:58 2005

DRAWING

TITLE=KEIDRWRA

ABBREV=DRAWING

www.laptop-schematics.com

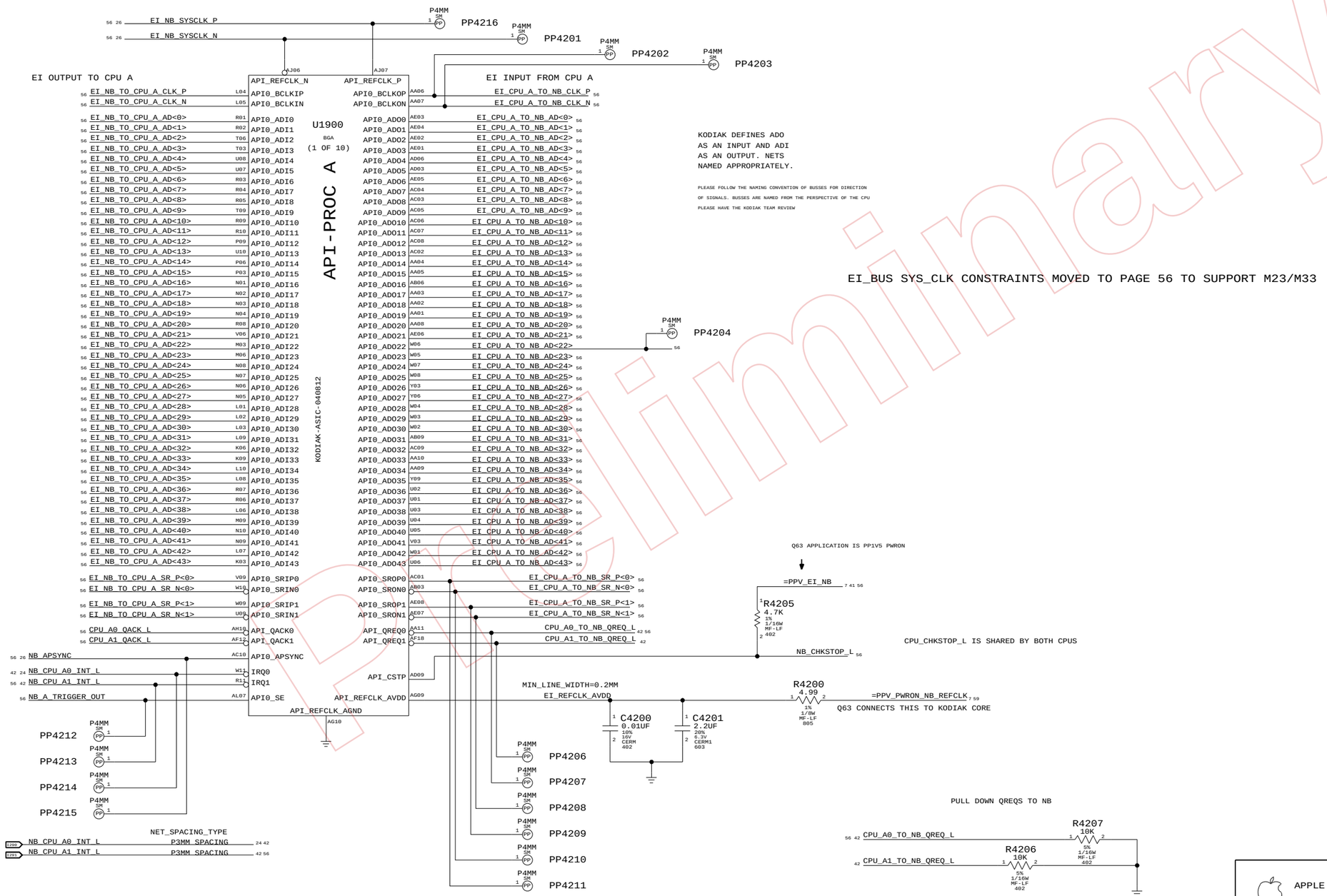

LAST_MODIFIED=Tue Nov 1 14:55:59 2005

DRAWING

T371:E:V21:L04MA

A6A0E0:V:S04W2A6

KODIAK EI A	
SYNC_MASTER=Q63	SYNC_DATE=08/01/2005

NOTICE OF PROPRIETARY PROPERTY

THE INFORMATION CONTAINED HEREIN IS THE PROPRIETARY PROPERTY OF APPLE COMPUTER, INC. THE POSSESSOR AGREES TO THE FOLLOWING

I TO MAINTAIN THE DOCUMENT IN CONFIDENCE

II NOT TO REPRODUCE OR COPY IT

III NOT TO REVEAL OR PUBLISH IN WHOLE OR PART

APPLE COMPUTER INC.

SIZE	DRAWING NUMBER	REV.
D	051-6790	E
SCALE NONE	SHT 42 OF 154	

Preliminary

www.laptop-schematics.com

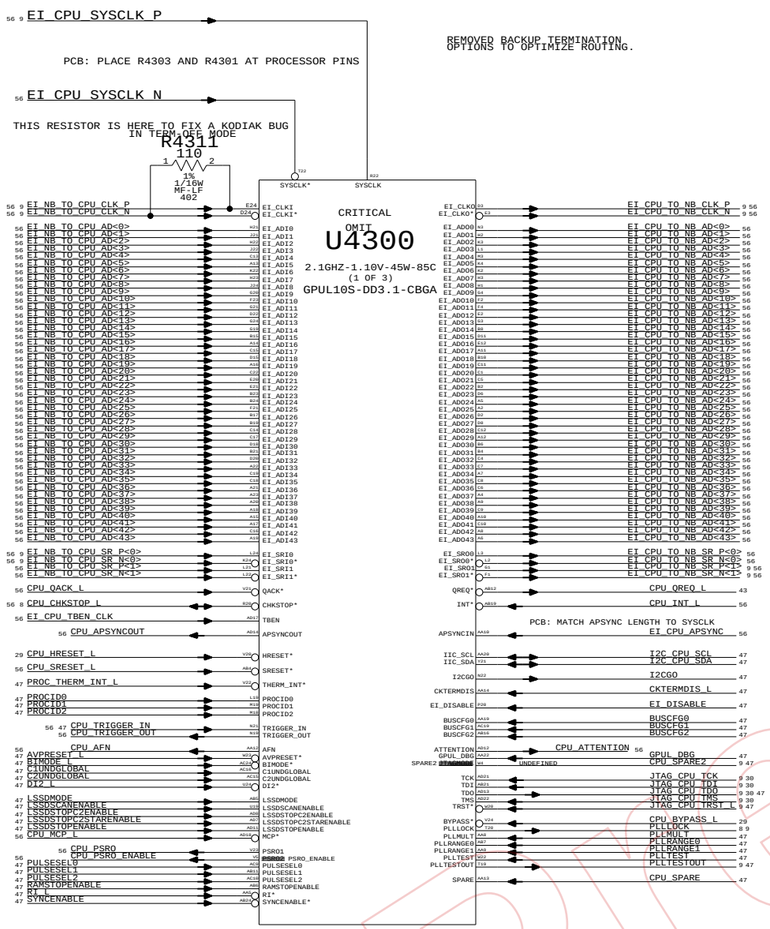

PG 49 & 52 HAVE MORE CAPS

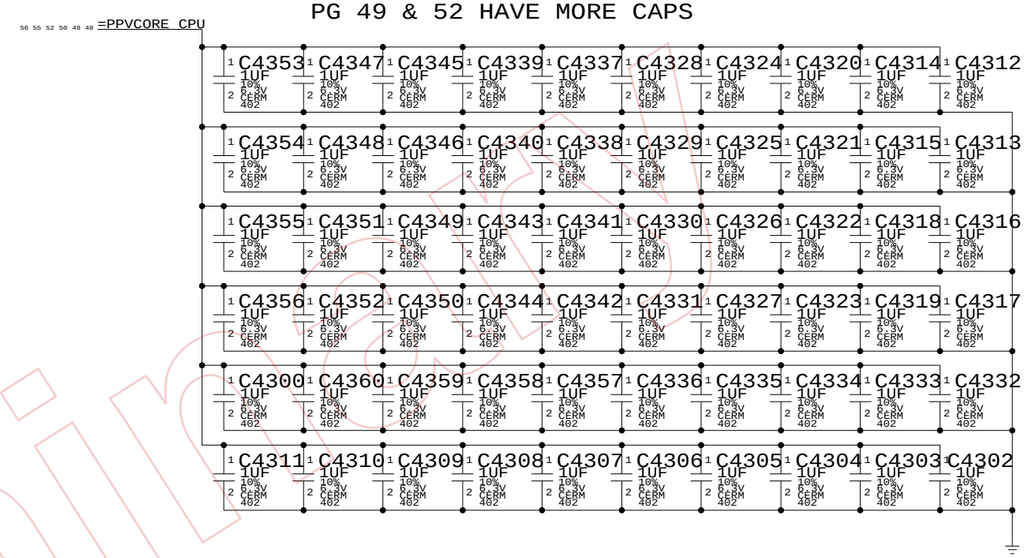

QREQ_L AND SUSPENDREQ_L AND HACK

SAME AS Q45

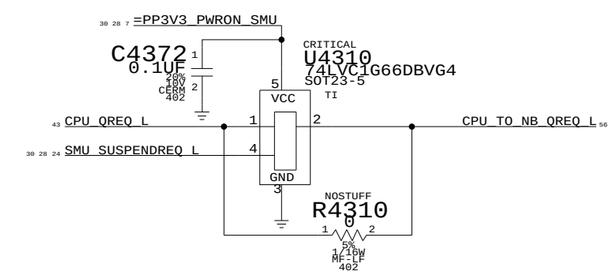

CPU EI AND IO

SYNC_MASTER=FINO-HS SYNC_DATE=06/20/2005

NOTICE OF PROPRIETARY PROPERTY

THE INFORMATION CONTAINED HEREIN IS THE PROPRIETARY PROPERTY OF APPLE COMPUTER, INC. THE POSSESSOR AGREES TO THE FOLLOWING

I TO MAINTAIN THE DOCUMENT IN CONFIDENCE

II NOT TO REPRODUCE OR COPY IT

III NOT TO REVEAL OR PUBLISH IN WHOLE OR PART

APPLE COMPUTER INC.

SIZE	DRAWING NUMBER	REV.
D	051-6790	E

SCALE NONE SHT 43 OF 154

Preliminary

www.laptop-schematics.com

PLEASE FOLLOW THE NAMING CONVENTION OF BUSSES FOR DIRECTION OF SIGNALS. BUSSES ARE NAMED FROM THE PERSPECTIVE OF THE CPU
PLEASE HAVE THE KODIAK TEAM REVIEW

EI OUTPUT TO CPU B

EI INPUT FROM CPU B

U1900 BGA (2 OF 10) API-PROC B KODIAK-ASIC-040812

Signal	Pin	Signal	Pin
EI_NB_TO_CPU_B_CLK_P	AT08	API1_BCLKIP	
EI_NB_TO_CPU_B_CLK_N	AR08	API1_BCLKIN	
		API1_BCLKOP	AT16
		API1_BCLKON	AR16
EI_NB_TO_CPU_B_AD<0>	AM12	API1_ADI0	
EI_NB_TO_CPU_B_AD<1>	AN12	API1_ADI1	
EI_NB_TO_CPU_B_AD<2>	AL12	API1_ADI2	
EI_NB_TO_CPU_B_AD<3>	AK12	API1_ADI3	
EI_NB_TO_CPU_B_AD<4>	AP11	API1_ADI4	
EI_NB_TO_CPU_B_AD<5>	AL11	API1_ADI5	
EI_NB_TO_CPU_B_AD<6>	AP12	API1_ADI6	
EI_NB_TO_CPU_B_AD<7>	AR12	API1_ADI7	
EI_NB_TO_CPU_B_AD<8>	AT12	API1_ADI8	
EI_NB_TO_CPU_B_AD<9>	AH12	API1_ADI9	
EI_NB_TO_CPU_B_AD<10>	AG12	API1_ADI10	
EI_NB_TO_CPU_B_AD<11>	AH13	API1_ADI11	
EI_NB_TO_CPU_B_AD<12>	AJ12	API1_ADI12	
EI_NB_TO_CPU_B_AD<13>	AG14	API1_ADI13	
EI_NB_TO_CPU_B_AD<14>	AM10	API1_ADI14	
EI_NB_TO_CPU_B_AD<15>	AL10	API1_ADI15	
EI_NB_TO_CPU_B_AD<16>	AN10	API1_ADI16	
EI_NB_TO_CPU_B_AD<17>	AP10	API1_ADI17	
EI_NB_TO_CPU_B_AD<18>	AR10	API1_ADI18	
EI_NB_TO_CPU_B_AD<19>	AT10	API1_ADI19	
EI_NB_TO_CPU_B_AD<20>	AK10	API1_ADI20	
EI_NB_TO_CPU_B_AD<21>	AJ10	API1_ADI21	
EI_NB_TO_CPU_B_AD<22>	AM08	API1_ADI22	
EI_NB_TO_CPU_B_AD<23>	AN08	API1_ADI23	
EI_NB_TO_CPU_B_AD<24>	AL08	API1_ADI24	
EI_NB_TO_CPU_B_AD<25>	AP07	API1_ADI25	
EI_NB_TO_CPU_B_AD<26>	AT06	API1_ADI26	
EI_NB_TO_CPU_B_AD<27>	AR06	API1_ADI27	
EI_NB_TO_CPU_B_AD<28>	AP08	API1_ADI28	
EI_NB_TO_CPU_B_AD<29>	AT04	API1_ADI29	
EI_NB_TO_CPU_B_AD<30>	AR04	API1_ADI30	
EI_NB_TO_CPU_B_AD<31>	AP05	API1_ADI31	
EI_NB_TO_CPU_B_AD<32>	AM06	API1_ADI32	
EI_NB_TO_CPU_B_AD<33>	AN06	API1_ADI33	
EI_NB_TO_CPU_B_AD<34>	AP06	API1_ADI34	
EI_NB_TO_CPU_B_AD<35>	AP04	API1_ADI35	
EI_NB_TO_CPU_B_AD<36>	AM03	API1_ADI36	
EI_NB_TO_CPU_B_AD<37>	AN01	API1_ADI37	
EI_NB_TO_CPU_B_AD<38>	AL06	API1_ADI38	
EI_NB_TO_CPU_B_AD<39>	AL05	API1_ADI39	
EI_NB_TO_CPU_B_AD<40>	AL04	API1_ADI40	
EI_NB_TO_CPU_B_AD<41>	AL03	API1_ADI41	
EI_NB_TO_CPU_B_AD<42>	AN02	API1_ADI42	
EI_NB_TO_CPU_B_AD<43>	AN03	API1_ADI43	
EI_NB_TO_CPU_B_SR_P<0>	AP09	API1_SRIP0	
EI_NB_TO_CPU_B_SR_N<0>	AL09	API1_SRIN0	
EI_NB_TO_CPU_B_SR_P<1>	AR02	API1_SRIP1	
EI_NB_TO_CPU_B_SR_N<1>	AP02	API1_SRIN1	
CPU_B0_QACK_L	AF12	API_QACK2	
CPU_B1_QACK_L	AC12	API_QACK3	
NB_CPU_B0_INT_L	N12	IRQ2	
NB_CPU_B1_INT_L	U12	IRQ3	
TP_NB_APSYNC	AH11	API1_APSYNC	
NB_B_TRIGGER_OUT	AK08	API1_SE	
		API1_AD00	AP20
		API1_AD01	AN20
		API1_AD02	AR20
		API1_AD03	AT20
		API1_AD04	AL19
		API1_AD05	AP19
		API1_AD06	AM20
		API1_AD07	AM18
		API1_AD08	AL18
		API1_AD09	AN18
		API1_AD010	AP18
		API1_AD011	AR18
		API1_AD012	AT18
		API1_AD013	AK18
		API1_AD014	AP17
		API1_AD015	AL17
		API1_AD016	AH20
		API1_AD017	AJ20
		API1_AD018	AK20
		API1_AD019	AH19
		API1_AD020	AG20
		API1_AD021	AL20
		API1_AD022	AM16
		API1_AD023	AN16
		API1_AD024	AL16
		API1_AD025	AK16
		API1_AD026	AP15
		API1_AD027	AL15
		API1_AD028	AP16
		API1_AD029	AM14
		API1_AD030	AL14
		API1_AD031	AN14
		API1_AD032	AP14
		API1_AD033	AR14
		API1_AD034	AT14
		API1_AD035	AK14
		API1_AD036	AP13
		API1_AD037	AL13
		API1_AD038	AG16
		API1_AD039	AH15
		API1_AD040	AJ14
		API1_AD041	AH14
		API1_AD042	AH16
		API1_AD043	AH17
		API1_SROP0	AG18
		API1_SRON0	AJ16
		API1_SROP1	AJ18
		API1_SRON1	AH18
		API_QREQ2	AF16
		API_QREQ3	AF20

Signal	Pin
EI_CPU_B_TO_NB_CLK_P	
EI_CPU_B_TO_NB_CLK_N	
EI_CPU_B_TO_NB_AD<0>	
EI_CPU_B_TO_NB_AD<1>	
EI_CPU_B_TO_NB_AD<2>	
EI_CPU_B_TO_NB_AD<3>	
EI_CPU_B_TO_NB_AD<4>	
EI_CPU_B_TO_NB_AD<5>	
EI_CPU_B_TO_NB_AD<6>	
EI_CPU_B_TO_NB_AD<7>	
EI_CPU_B_TO_NB_AD<8>	
EI_CPU_B_TO_NB_AD<9>	
EI_CPU_B_TO_NB_AD<10>	
EI_CPU_B_TO_NB_AD<11>	
EI_CPU_B_TO_NB_AD<12>	
EI_CPU_B_TO_NB_AD<13>	
EI_CPU_B_TO_NB_AD<14>	
EI_CPU_B_TO_NB_AD<15>	
EI_CPU_B_TO_NB_AD<16>	
EI_CPU_B_TO_NB_AD<17>	
EI_CPU_B_TO_NB_AD<18>	
EI_CPU_B_TO_NB_AD<19>	
EI_CPU_B_TO_NB_AD<20>	
EI_CPU_B_TO_NB_AD<21>	
EI_CPU_B_TO_NB_AD<22>	
EI_CPU_B_TO_NB_AD<23>	
EI_CPU_B_TO_NB_AD<24>	
EI_CPU_B_TO_NB_AD<25>	
EI_CPU_B_TO_NB_AD<26>	
EI_CPU_B_TO_NB_AD<27>	
EI_CPU_B_TO_NB_AD<28>	
EI_CPU_B_TO_NB_AD<29>	
EI_CPU_B_TO_NB_AD<30>	
EI_CPU_B_TO_NB_AD<31>	
EI_CPU_B_TO_NB_AD<32>	
EI_CPU_B_TO_NB_AD<33>	
EI_CPU_B_TO_NB_AD<34>	
EI_CPU_B_TO_NB_AD<35>	
EI_CPU_B_TO_NB_AD<36>	
EI_CPU_B_TO_NB_AD<37>	
EI_CPU_B_TO_NB_AD<38>	
EI_CPU_B_TO_NB_AD<39>	
EI_CPU_B_TO_NB_AD<40>	
EI_CPU_B_TO_NB_AD<41>	
EI_CPU_B_TO_NB_AD<42>	
EI_CPU_B_TO_NB_AD<43>	
EI_CPU_B_TO_NB_SR_P<0>	
EI_CPU_B_TO_NB_SR_N<0>	
EI_CPU_B_TO_NB_SR_P<1>	
EI_CPU_B_TO_NB_SR_N<1>	
CPU_B0_TO_NB_QREQ_L	
CPU_B1_TO_NB_QREQ_L	

KODIAK DEFINES ADO AS AN INPUT AND ADI AS AN OUTPUT. NETS NAMED APPROPRIATELY.

WE MAY NEED A DIFFERENT ELECTRICAL_CONSTRAINT_SET FOR CPU_A AND CPU_B.

EI_BUS SYS_CLK CONSTRAINTS MOVED TO PAGE 56 TO SUPPORT M23/M33

WIRE TP_NB_APSYNC TO A TEST POINT

PP4410 PP4411 PP4413 PP4400 PP4401 PP4402 PP4403 PP4404 PP4405 PP4406 PP4407 PP4408

NET_SPACING_TYPE

Net	Spacing
NB_CPU_B0_INT_L	P3MM_SPACING
NB_CPU_B1_INT_L	P3MM_SPACING

PULL DOWN QREQS TO NB

R4407 10K 5% 1/16W MF-LF 402

R4406 10K 5% 1/16W MF-LF 402

Preliminary

www.laptop-schematics.com

KODIAK EI B

SYNC_MASTER=Q63 SYNC_DATE=08/01/2005

NOTICE OF PROPRIETARY PROPERTY

THE INFORMATION CONTAINED HEREIN IS THE PROPRIETARY PROPERTY OF APPLE COMPUTER, INC. THE POSSESSOR AGREES TO THE FOLLOWING

I TO MAINTAIN THE DOCUMENT IN CONFIDENCE

II NOT TO REPRODUCE OR COPY IT

III NOT TO REVEAL OR PUBLISH IN WHOLE OR PART

APPLE COMPUTER INC.

SIZE	DRAWING NUMBER	REV.
D	051-6790	E
SCALE NONE	SHT 44 OF 154	

LAST_MODIFIED=Tue Nov 1 14:56:00 2005

DRAWING TITLE=K2LL0400A ABBREV=DRAWING

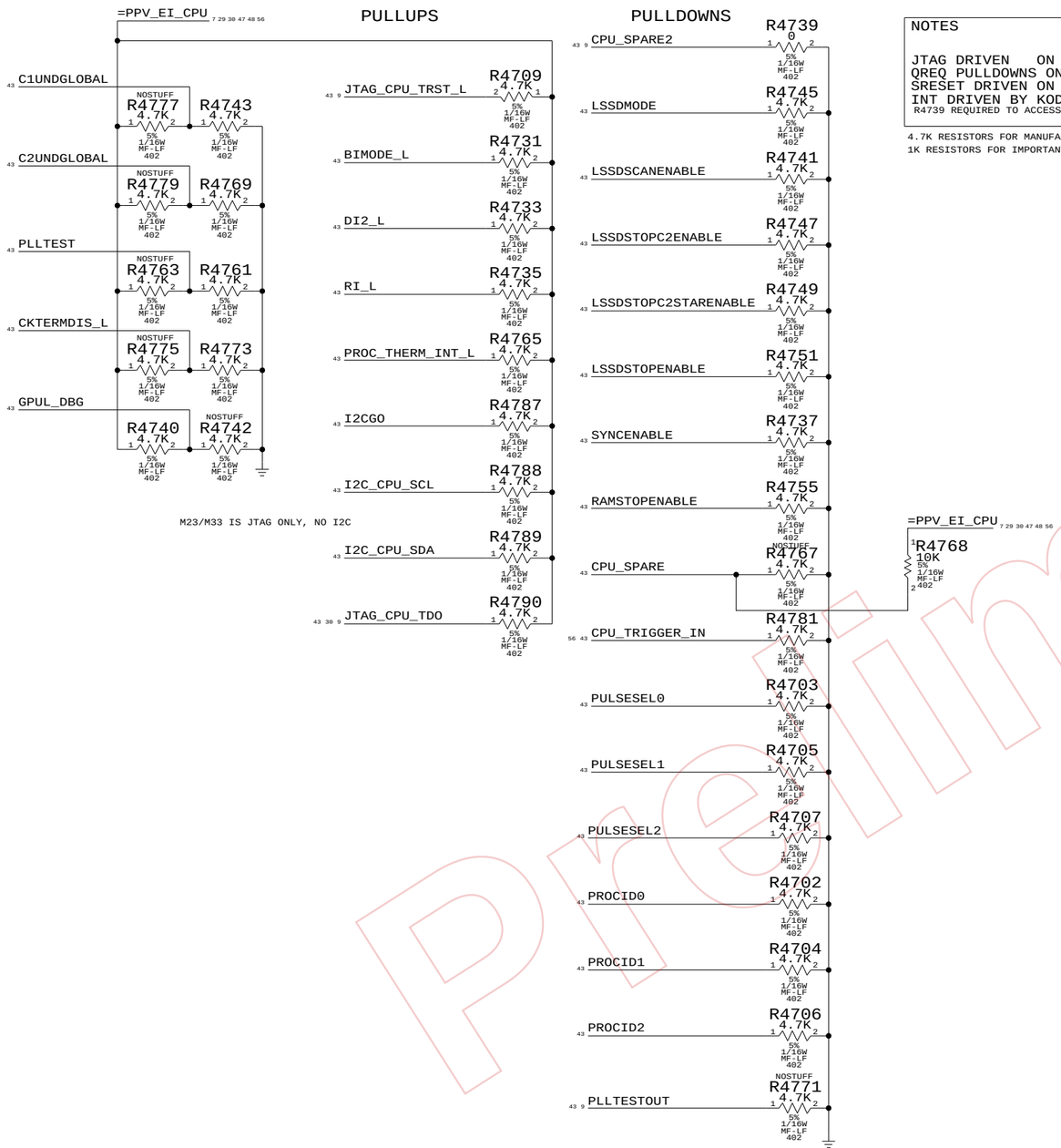

M23/M33 IS JTAG ONLY, NO I2C

NOTES

JTAG DRIVEN ON SMU PG 30
QREQ PULLDOWNS ON Q63 SHARED PAGE
SRESET DRIVEN ON PG 56
INT DRIVEN BY KODIAK
R4739 REQUIRED TO ACCESS THE RINGS

4.7K RESISTORS FOR MANUFACTURING-TEST-TYPE PULLUPS OR PULLDOWNS.
1K RESISTORS FOR IMPORTANT USE OR STRAPPING OPTIONS.

SELECT PROCESSOR CLOCK MULTIPLIER. PROCESSOR CLOCK(MHZ)= SYSTCLOCK * PLLMULT.

	PART#	QTY	DESCRIPTION	REFERENCE DESIGNATOR(S)	BOM OPTION	
*	116S0066	1	RES,1K OHM,1/16W,5%,0402	R4734	EI_3TO1	SYSCLK * 12
	116S0066	1	RES,1K OHM,1/16W,5%,0402	R4718	EI_2TO1	SYSCLK * 8

SELECT EI BUS DIVIDER. BUS DATA RATE(BPS)= (PROCESSOR CLOCK) / BUSCFG.

	PART#	QTY	DESCRIPTION	REFERENCE DESIGNATOR(S)	BOM OPTION	
	116S0066	3	RES,1K OHM,1/16W,5%,0402	R4724,R4726,R4728	EI_2TO1	PROC / 2
*	116S0066	3	RES,1K OHM,1/16W,5%,0402	R4724,R4726,R4712	EI_3TO1	PROC / 3
	116S0066	3	RES,1K OHM,1/16W,5%,0402	R4724,R4710,R4728	NOSTUFF	PROC / 4
	116S0066	3	RES,1K OHM,1/16W,5%,0402	R4724,R4710,R4712	NOSTUFF	PROC / 6
	116S0066	3	RES,1K OHM,1/16W,5%,0402	R4708,R4726,R4728	NOSTUFF	PROC / 8
	116S0066	3	RES,1K OHM,1/16W,5%,0402	R4708,R4726,R4712	NOSTUFF	PROC / 12
	116S0066	3	RES,1K OHM,1/16W,5%,0402	R4708,R4710,R4728	NOSTUFF	PROC / 16
	116S0066	3	RES,1K OHM,1/16W,5%,0402	R4708,R4710,R4712	NOSTUFF	

SELECT ELASTIC MODE OR BYPASS.

	PART#	QTY	DESCRIPTION	REFERENCE DESIGNATOR(S)	BOM OPTION	
*	116S0066	1	RES,1K OHM,1/16W,5%,0402	R4736		
	116S0066	1	RES,1K OHM,1/16W,5%,0402	R4720	NOSTUFF	BYPASS MODE

SELECT PLL FREQUENCY RANGE.

	PART#	QTY	DESCRIPTION	REFERENCE DESIGNATOR(S)	BOM OPTION	
	116S0066	2	RES,1K OHM,1/16W,5%,0402	R4730,R4732	CPU_PLL_LOW	
>= 1.8 GHZ *	116S0066	2	RES,1K OHM,1/16W,5%,0402	R4730,R4716	CPU_PLL_HIGH	
	116S0066	2	RES,1K OHM,1/16W,5%,0402	R4714,R4732	CPU_PLL_MEDIUM	
	116S0066	2	RES,1K OHM,1/16W,5%,0402	R4714,R4716	NOSTUFF	RESERVED

PART#	QTY	DESCRIPTION	REFERENCE DESIGNATOR(S)	BOM OPTION	
116S0066	1	RES,1K OHM,1/16W,5%,0402	R4722		AVPRESET OFF
116S0066	1	RES,1K OHM,1/16W,5%,0402	R4738	NOSTUFF	AVPRESET ON

* STUFF THESE ON M23.

PROCESSOR BUS CONFIGURATION

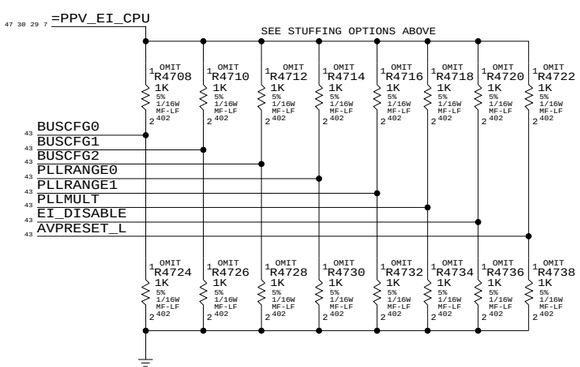

CPU STRAPS

SYNC_MASTER=FINO-HS SYNC_DATE=06/20/2005

NOTICE OF PROPRIETARY PROPERTY

THE INFORMATION CONTAINED HEREIN IS THE PROPRIETARY PROPERTY OF APPLE COMPUTER, INC. THE POSSESSOR AGREES TO THE FOLLOWING

I TO MAINTAIN THE DOCUMENT IN CONFIDENCE
II NOT TO REPRODUCE OR COPY IT
III NOT TO REVEAL OR PUBLISH IN WHOLE OR PART

APPLE COMPUTER INC.

SIZE	DRAWING NUMBER	REV.
D	051-6790	E
SCALE NONE	SHT 47 OF 154	

Preliminary
www.laptop-schematics.com

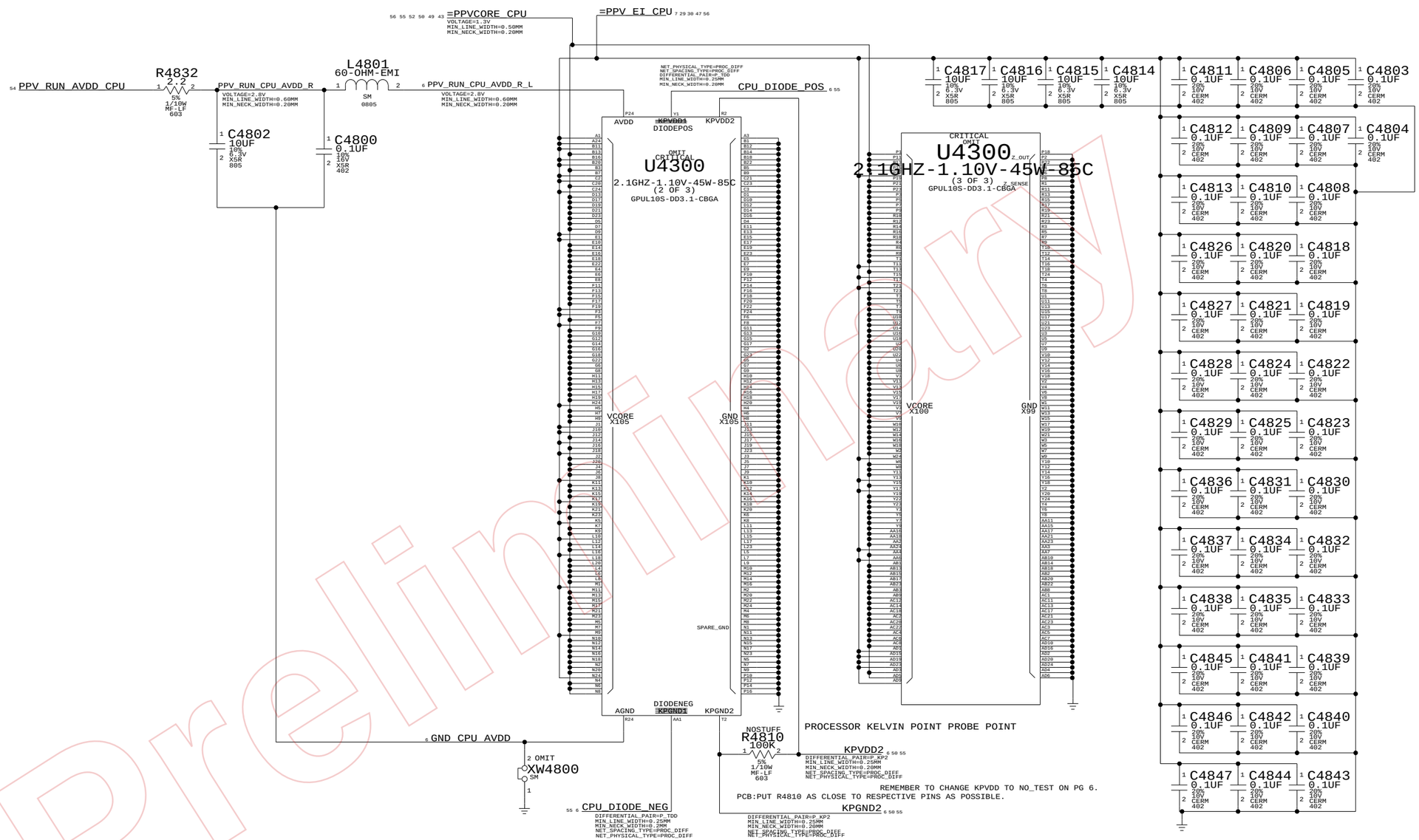

CPU POWER AND BYPASS

SYNC_MASTER=FINO-HS SYNC_DATE=06/20/2005

NOTICE OF PROPRIETARY PROPERTY

THE INFORMATION CONTAINED HEREIN IS THE PROPRIETARY PROPERTY OF APPLE COMPUTER, INC. THE POSSESSOR AGREES TO THE FOLLOWING

I TO MAINTAIN THE DOCUMENT IN CONFIDENCE

II NOT TO REPRODUCE OR COPY IT

III NOT TO REVEAL OR PUBLISH IN WHOLE OR PART

APPLE COMPUTER INC.

SIZE	DRAWING NUMBER	REV.
D	051-6790	E
SCALE NONE	SHT 48 OF 154	

Preliminary

www.laptop-schematics.com

56 55 52 50 48 43 =PPVCORE_CPU

C4922 1UF 10% 6.3V CERM 402	C4921 1UF 10% 6.3V CERM 402	C4920 1UF 10% 6.3V CERM 402	C4919 1UF 10% 6.3V CERM 402	C4918 1UF 10% 6.3V CERM 402	C4917 1UF 10% 6.3V CERM 402	C4916 1UF 10% 6.3V CERM 402	C4915 1UF 10% 6.3V CERM 402	C4912 1UF 10% 6.3V CERM 402	C4900 1UF 10% 6.3V CERM 402
C4993 1UF 10% 6.3V CERM 402	C4968 1UF 10% 6.3V CERM 402	C4961 1UF 10% 6.3V CERM 402	C4959 1UF 10% 6.3V CERM 402	C4935 1UF 10% 6.3V CERM 402	C4932 1UF 10% 6.3V CERM 402	C4926 1UF 10% 6.3V CERM 402	C4924 1UF 10% 6.3V CERM 402	C4945 1UF 10% 6.3V CERM 402	C4923 1UF 10% 6.3V CERM 402
C4994 1UF 10% 6.3V CERM 402	C4969 1UF 10% 6.3V CERM 402	C4964 1UF 10% 6.3V CERM 402	C4960 1UF 10% 6.3V CERM 402	C4936 1UF 10% 6.3V CERM 402	C4933 1UF 10% 6.3V CERM 402	C4927 1UF 10% 6.3V CERM 402	C4925 1UF 10% 6.3V CERM 402	C4956 1UF 10% 6.3V CERM 402	C4934 1UF 10% 6.3V CERM 402
C4995 1UF 10% 6.3V CERM 402	C4971 1UF 10% 6.3V CERM 402	C4965 1UF 10% 6.3V CERM 402	C4962 1UF 10% 6.3V CERM 402	C4939 1UF 10% 6.3V CERM 402	C4937 1UF 10% 6.3V CERM 402	C4930 1UF 10% 6.3V CERM 402	C4928 1UF 10% 6.3V CERM 402	C4989 1UF 10% 6.3V CERM 402	C4967 1UF 10% 6.3V CERM 402
C4996 1UF 10% 6.3V CERM 402	C4970 1UF 10% 6.3V CERM 402	C4966 1UF 10% 6.3V CERM 402	C4963 1UF 10% 6.3V CERM 402	C4940 1UF 10% 6.3V CERM 402	C4938 1UF 10% 6.3V CERM 402	C4931 1UF 10% 6.3V CERM 402	C4929 1UF 10% 6.3V CERM 402	C4901 1UF 10% 6.3V CERM 402	C4978 1UF 10% 6.3V CERM 402
C4997 1UF 10% 6.3V CERM 402	C4982 1UF 10% 6.3V CERM 402	C4976 1UF 10% 6.3V CERM 402	C4972 1UF 10% 6.3V CERM 402	C4952 1UF 10% 6.3V CERM 402	C4950 1UF 10% 6.3V CERM 402	C4943 1UF 10% 6.3V CERM 402	C4941 1UF 10% 6.3V CERM 402	C4906 1UF 10% 6.3V CERM 402	C4904 1UF 10% 6.3V CERM 402
C4998 1UF 10% 6.3V CERM 402	C4981 1UF 10% 6.3V CERM 402	C4977 1UF 10% 6.3V CERM 402	C4973 1UF 10% 6.3V CERM 402	C4953 1UF 10% 6.3V CERM 402	C4951 1UF 10% 6.3V CERM 402	C4944 1UF 10% 6.3V CERM 402	C4942 1UF 10% 6.3V CERM 402	C4907 1UF 10% 6.3V CERM 402	C4905 1UF 10% 6.3V CERM 402
C4999 1UF 10% 6.3V CERM 402	C4984 1UF 10% 6.3V CERM 402	C4979 1UF 10% 6.3V CERM 402	C4974 1UF 10% 6.3V CERM 402	C4957 1UF 10% 6.3V CERM 402	C4954 1UF 10% 6.3V CERM 402	C4948 1UF 10% 6.3V CERM 402	C4946 1UF 10% 6.3V CERM 402	C4910 1UF 10% 6.3V CERM 402	C4908 1UF 10% 6.3V CERM 402
C4902 1UF 10% 6.3V CERM 402	C4983 1UF 10% 6.3V CERM 402	C4980 1UF 10% 6.3V CERM 402	C4975 1UF 10% 6.3V CERM 402	C4958 1UF 10% 6.3V CERM 402	C4955 1UF 10% 6.3V CERM 402	C4949 1UF 10% 6.3V CERM 402	C4947 1UF 10% 6.3V CERM 402	C4911 1UF 10% 6.3V CERM 402	C4909 1UF 10% 6.3V CERM 402
C4903 1UF 10% 6.3V CERM 402	C4992 1UF 10% 6.3V CERM 402	C4991 1UF 10% 6.3V CERM 402	C4990 1UF 10% 6.3V CERM 402	C4988 1UF 10% 6.3V CERM 402	C4987 1UF 10% 6.3V CERM 402	C4986 1UF 10% 6.3V CERM 402	C4985 1UF 10% 6.3V CERM 402	C4914 1UF 10% 6.3V CERM 402	C4913 1UF 10% 6.3V CERM 402

Preliminary

www.laptop-schematics.com

PROC DECOUPLING

SYNC_MASTER=FINO-HS SYNC_DATE=06/20/2005

NOTICE OF PROPRIETARY PROPERTY

THE INFORMATION CONTAINED HEREIN IS THE PROPRIETARY PROPERTY OF APPLE COMPUTER, INC. THE POSSESSOR AGREES TO THE FOLLOWING

I TO MAINTAIN THE DOCUMENT IN CONFIDENCE

II NOT TO REPRODUCE OR COPY IT

III NOT TO REVEAL OR PUBLISH IN WHOLE OR PART

APPLE COMPUTER INC.

SIZE	DRAWING NUMBER	REV.
D	051-6790	E
SCALE NONE	SHT 49 OF 154	

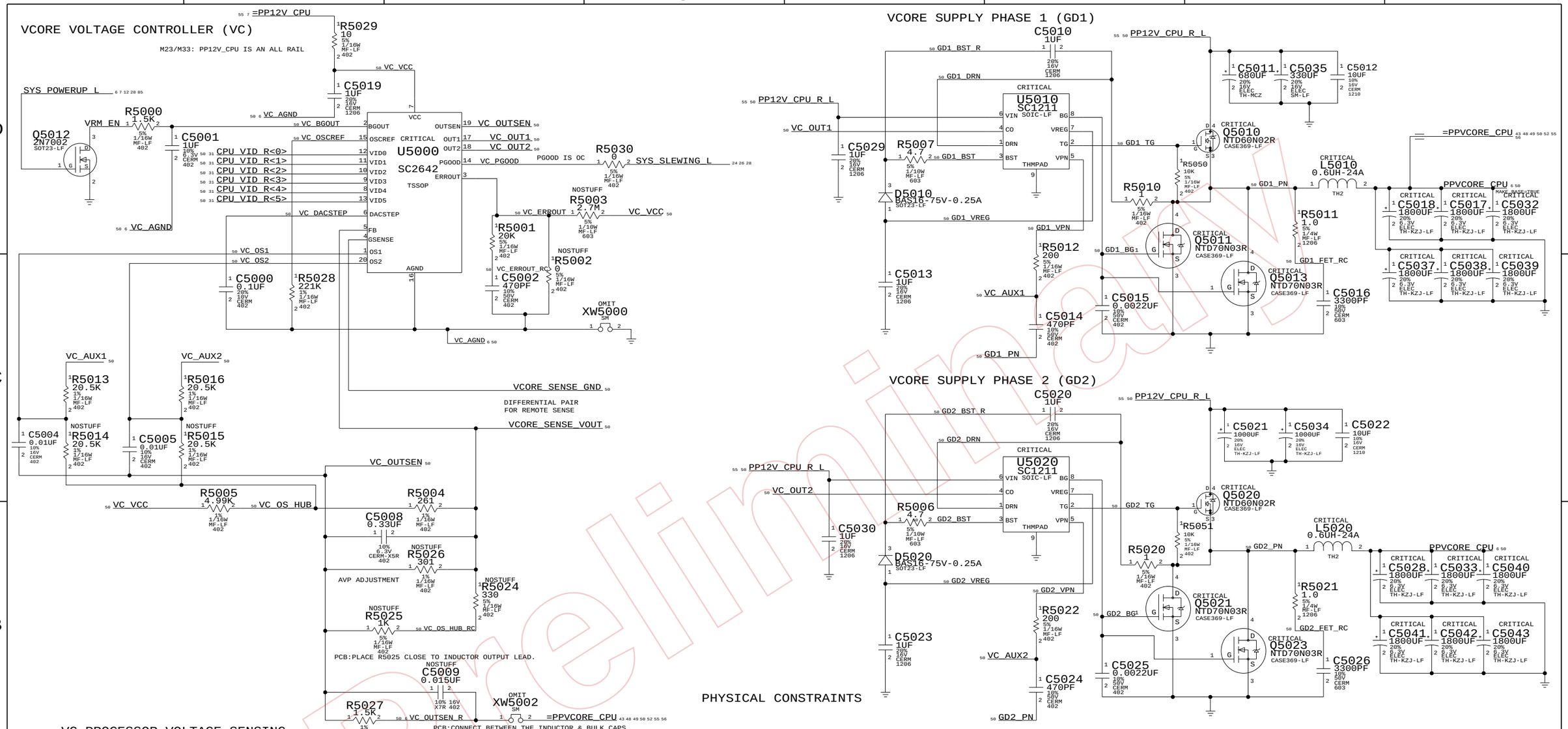

	MIN_LINE_WIDTH	MIN_NECK_WIDTH
VC_OSCREF	0.25 MM	0.20 MM
CPU_VID_R<0..5>	0.25 MM	0.20 MM
VC_DACSTEP	0.25 MM	0.20 MM
VC_AGND	0.50 MM	0.20 MM
VC_BGOUT	0.25 MM	0.20 MM
VC_OS1	0.25 MM	0.20 MM
VC_OS2	0.25 MM	0.20 MM
VC_VCC	0.25 MM	0.25 MM
VC_OS_HUB	0.25 MM	0.20 MM
VC_OUTSEN	0.25 MM	0.20 MM
VC_OUTSEN_R	0.25 MM	0.20 MM
VCORE_SENSE_GND	0.25 MM	0.20 MM
VCORE_SENSE_VOUT	0.25 MM	0.20 MM
VC_AUX1	0.25 MM	0.25 MM
VC_AUX2	0.25 MM	0.25 MM
VC_OUT1	0.45 MM	0.25 MM
VC_OUT2	0.45 MM	0.25 MM
VC_ERROUT	0.25 MM	0.20 MM
VC_ERROUT_RC	0.25 MM	0.20 MM
VC_OS_HUB_RC	0.25 MM	0.20 MM

	MIN_LINE_WIDTH	MIN_NECK_WIDTH
GD1_DRN	0.25 MM	0.25 MM
GD1_BST	0.25 MM	0.25 MM
GD1_VREG	0.25 MM	0.25 MM
GD1_VPN	0.25 MM	0.25 MM
GD1_TG	0.25 MM	0.25 MM
GD1_BG	0.25 MM	0.25 MM
GD1_FET_RC	0.25 MM	0.25 MM
GD1_PN	0.60 MM	0.25 MM
GD1_BST_R	0.25 MM	0.25 MM

	MIN_LINE_WIDTH	MIN_NECK_WIDTH
GD2_DRN	0.25 MM	0.25 MM
GD2_BST	0.25 MM	0.25 MM
GD2_VREG	0.25 MM	0.25 MM
GD2_VPN	0.25 MM	0.25 MM
GD2_TG	0.25 MM	0.25 MM
GD2_BG	0.25 MM	0.25 MM
GD2_FET_RC	0.25 MM	0.25 MM
GD2_PN	0.60 MM	0.25 MM
GD2_BST_R	0.25 MM	0.25 MM

PART NUMBER	ALTERNATE FOR PART NUMBER	BOM OPTION	REF DES	COMMENTS:
376S0340	376S0388		Q5010,Q5020	
376S0341	376S0390		Q5011,Q5013,Q5021,Q5023	

CPU VCORE VREG

SYNC_MASTER=M23-HS SYNC_DATE=06/20/2005

NOTICE OF PROPRIETARY PROPERTY

THE INFORMATION CONTAINED HEREIN IS THE PROPRIETARY PROPERTY OF APPLE COMPUTER, INC. THE POSSESSOR AGREES TO THE FOLLOWING

I TO MAINTAIN THE DOCUMENT IN CONFIDENCE

II NOT TO REPRODUCE OR COPY IT

III NOT TO REVEAL OR PUBLISH IN WHOLE OR PART

APPLE COMPUTER INC.

SIZE	DRAWING NUMBER	REV.
D	051-6790	E
SCALE NONE	SHT 50 OF 154	

Preliminary
www.laptop-schematics.com

56 55 50 49 48 43 =PPVCORE_CPU

CRITICAL

C5200 10UF 10% 6.3V X5R 0805	C5212 10UF 10% 6.3V X5R 0805	C5223 10UF 10% 6.3V X5R 0805	C5234 10UF 10% 6.3V X5R 0805	C5245 10UF 10% 6.3V X5R 0805	C5201 10UF 10% 6.3V X5R 0805	C5289 10UF 10% 6.3V X5R 0805	C5278 10UF 10% 6.3V X5R 0805	C5267 10UF 10% 6.3V X5R 0805	C5256 10UF 10% 6.3V X5R 0805
C5213 10UF 10% 6.3V X5R 0805	C5211 10UF 10% 6.3V X5R 0805	C5210 10UF 10% 6.3V X5R 0805	C5209 10UF 10% 6.3V X5R 0805	C5208 10UF 10% 6.3V X5R 0805	C5207 10UF 10% 6.3V X5R 0805	C5206 10UF 10% 6.3V X5R 0805	C5205 10UF 10% 6.3V X5R 0805	C5204 10UF 10% 6.3V X5R 0805	C5203 10UF 10% 6.3V X5R 0805
C5224 10UF 10% 6.3V X5R 0805	C5222 10UF 10% 6.3V X5R 0805	C5221 10UF 10% 6.3V X5R 0805	C5220 10UF 10% 6.3V X5R 0805	C5219 10UF 10% 6.3V X5R 0805	C5218 10UF 10% 6.3V X5R 0805	C5217 10UF 10% 6.3V X5R 0805	C5216 10UF 10% 6.3V X5R 0805	C5215 10UF 10% 6.3V X5R 0805	C5214 10UF 10% 6.3V X5R 0805
C5235 10UF 10% 6.3V X5R 0805	C5233 10UF 10% 6.3V X5R 0805	C5232 10UF 10% 6.3V X5R 0805	C5231 10UF 10% 6.3V X5R 0805	C5230 10UF 10% 6.3V X5R 0805	C5229 10UF 10% 6.3V X5R 0805	C5228 10UF 10% 6.3V X5R 0805	C5227 10UF 10% 6.3V X5R 0805	C5226 10UF 10% 6.3V X5R 0805	C5225 10UF 10% 6.3V X5R 0805
C5246 10UF 10% 6.3V X5R 0805	C5244 10UF 10% 6.3V X5R 0805	C5243 10UF 10% 6.3V X5R 0805	C5242 10UF 10% 6.3V X5R 0805	C5241 10UF 10% 6.3V X5R 0805	C5240 10UF 10% 6.3V X5R 0805	C5239 10UF 10% 6.3V X5R 0805	C5238 10UF 10% 6.3V X5R 0805	C5237 10UF 10% 6.3V X5R 0805	C5236 10UF 10% 6.3V X5R 0805
C5257 10UF 10% 6.3V X5R 0805	C5255 10UF 10% 6.3V X5R 0805	C5254 10UF 10% 6.3V X5R 0805	C5253 10UF 10% 6.3V X5R 0805	C5252 10UF 10% 6.3V X5R 0805	C5251 10UF 10% 6.3V X5R 0805	C5250 10UF 10% 6.3V X5R 0805	C5249 10UF 10% 6.3V X5R 0805	C5248 10UF 10% 6.3V X5R 0805	C5247 10UF 10% 6.3V X5R 0805
C5268 10UF 10% 6.3V X5R 0805	C5266 10UF 10% 6.3V X5R 0805	C5265 10UF 10% 6.3V X5R 0805	C5264 10UF 10% 6.3V X5R 0805	C5263 10UF 10% 6.3V X5R 0805	C5262 10UF 10% 6.3V X5R 0805	C5261 10UF 10% 6.3V X5R 0805	C5260 10UF 10% 6.3V X5R 0805	C5259 10UF 10% 6.3V X5R 0805	C5258 10UF 10% 6.3V X5R 0805
C5279 10UF 10% 6.3V X5R 0805	C5277 10UF 10% 6.3V X5R 0805	C5276 10UF 10% 6.3V X5R 0805	C5275 10UF 10% 6.3V X5R 0805	C5274 10UF 10% 6.3V X5R 0805	C5273 10UF 10% 6.3V X5R 0805	C5272 10UF 10% 6.3V X5R 0805	C5271 10UF 10% 6.3V X5R 0805	C5270 10UF 10% 6.3V X5R 0805	C5269 10UF 10% 6.3V X5R 0805
C5290 10UF 10% 6.3V X5R 0805	C5288 10UF 10% 6.3V X5R 0805	C5287 10UF 10% 6.3V X5R 0805	C5286 10UF 10% 6.3V X5R 0805	C5285 10UF 10% 6.3V X5R 0805	C5284 10UF 10% 6.3V X5R 0805	C5283 10UF 10% 6.3V X5R 0805	C5282 10UF 10% 6.3V X5R 0805	C5281 10UF 10% 6.3V X5R 0805	C5280 10UF 10% 6.3V X5R 0805
C5202 10UF 10% 6.3V X5R 0805	C5299 10UF 10% 6.3V X5R 0805	C5298 10UF 10% 6.3V X5R 0805	C5297 10UF 10% 6.3V X5R 0805	C5296 10UF 10% 6.3V X5R 0805	C5295 10UF 10% 6.3V X5R 0805	C5294 10UF 10% 6.3V X5R 0805	C5293 10UF 10% 6.3V X5R 0805	C5292 10UF 10% 6.3V X5R 0805	C5291 10UF 10% 6.3V X5R 0805

Preliminary

www.laptop-schematics.com

CPU VCORE MORE BYPASS

SYNC_MASTER=FINO-HS SYNC_DATE=06/20/2005

NOTICE OF PROPRIETARY PROPERTY

THE INFORMATION CONTAINED HEREIN IS THE PROPRIETARY PROPERTY OF APPLE COMPUTER, INC. THE POSSESSOR AGREES TO THE FOLLOWING

I TO MAINTAIN THE DOCUMENT IN CONFIDENCE

II NOT TO REPRODUCE OR COPY IT

III NOT TO REVEAL OR PUBLISH IN WHOLE OR PART

APPLE COMPUTER INC.

SIZE	DRAWING NUMBER	REV.
D	051-6790	E
SCALE NONE	SHT 52 OF 154	

PROCESSOR AVDD VREG

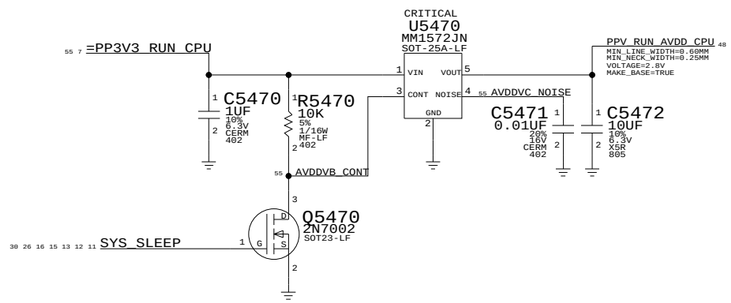

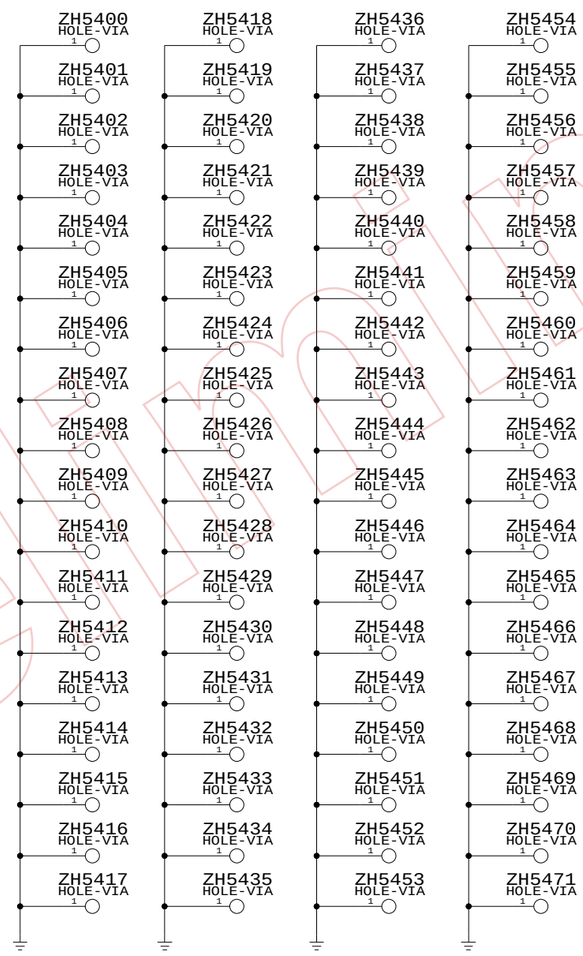

Preliminary

www.laptop-schematics.com

CPU AVDD VREG

SYNC_MASTER=FINO-HS SYNC_DATE=06/20/2005

NOTICE OF PROPRIETARY PROPERTY

THE INFORMATION CONTAINED HEREIN IS THE PROPRIETARY PROPERTY OF APPLE COMPUTER, INC. THE POSSESSOR AGREES TO THE FOLLOWING

I TO MAINTAIN THE DOCUMENT IN CONFIDENCE

II NOT TO REPRODUCE OR COPY IT

III NOT TO REVEAL OR PUBLISH IN WHOLE OR PART

APPLE COMPUTER INC.

SIZE	DRAWING NUMBER	REV.
D	051-6790	E
SCALE NONE	SHT 54 OF 154	

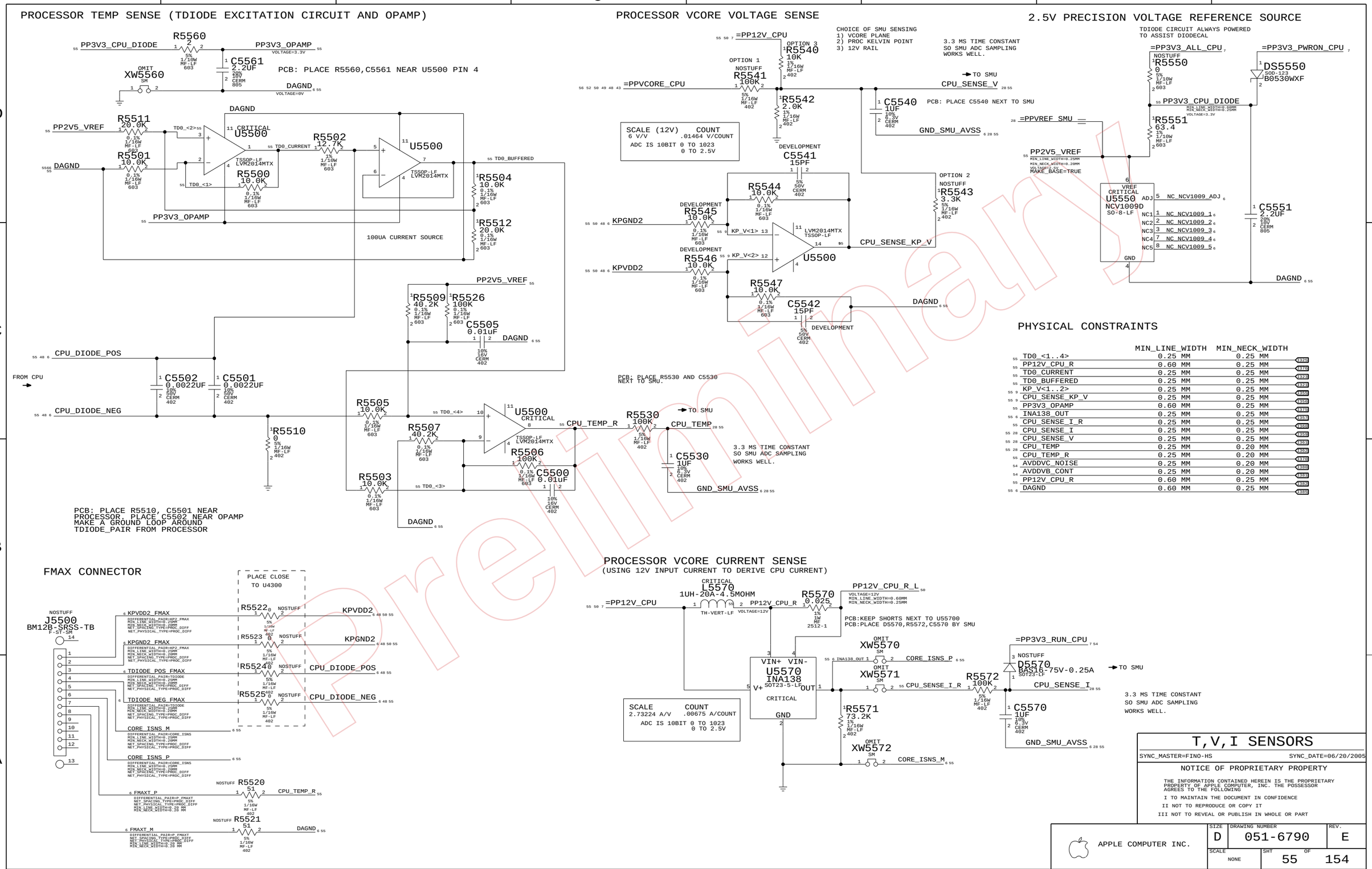

Preliminary!

www.laptop-schematics.com

CONNECT PULSAR CLKS TO CPU/NB

EI_CPU_SYSCLK_P	MAKE_BASE=TRUE	EI_CPU_A_SYSCLK_P
EI_CPU_SYSCLK_N	MAKE_BASE=TRUE	EI_CPU_A_SYSCLK_N
EI_CPU_APSYNC	MAKE_BASE=TRUE	CPU_A_APSYNC
EI_CPU_TBEN_CLK	MAKE_BASE=TRUE	CPU_A_TBEN_CLK_US
EI_NB_APSYNC	MAKE_BASE=TRUE	NB_APSYNC

CONNECT KODIAK EI A TO/FROM CPU

EI_NB_TO_CPU_CLK_P		EI_NB_TO_CPU_A_CLK_P
EI_NB_TO_CPU_CLK_N	MAKE_BASE=TRUE	EI_NB_TO_CPU_A_CLK_N
EI_NB_TO_CPU_AD<0..43>	MAKE_BASE=TRUE	EI_NB_TO_CPU_A_AD<0..43>
EI_NB_TO_CPU_SR_P<0..1>	MAKE_BASE=TRUE	EI_NB_TO_CPU_A_SR_P<0..1>
EI_NB_TO_CPU_SR_N<0..1>	MAKE_BASE=TRUE	EI_NB_TO_CPU_A_SR_N<0..1>
EI_CPU_TO_NB_CLK_P		EI_CPU_A_TO_NB_CLK_P
EI_CPU_TO_NB_CLK_N	MAKE_BASE=TRUE	EI_CPU_A_TO_NB_CLK_N
EI_CPU_TO_NB_AD<0..43>	MAKE_BASE=TRUE	EI_CPU_A_TO_NB_AD<0..43>
EI_CPU_TO_NB_SR_P<0..1>	MAKE_BASE=TRUE	EI_CPU_A_TO_NB_SR_P<0..1>
EI_CPU_TO_NB_SR_N<0..1>	MAKE_BASE=TRUE	EI_CPU_A_TO_NB_SR_N<0..1>

CONNECT CPU TO KODIAK QREQ A0

CPU_TO_NB_QREQ_L	MAKE_BASE=TRUE	CPU_A0_TO_NB_QREQ_L

CONNECT CPU TO KODIAK QACK A0, NC OTHERWISE

CPU_QACK_L		CPU_A0_QACK_L
NC_CPU_A1_QACK_L	MAKE_BASE=TRUE	CPU_A1_QACK_L
NC_CPU_B0_QACK_L	MAKE_BASE=TRUE	CPU_B0_QACK_L
NC_CPU_B1_QACK_L	MAKE_BASE=TRUE	CPU_B1_QACK_L

CONNECT CPU TO KODIAK/SHASTA INT A0, NC OTHERWISE

CPU_INT_L		CPU_A0_INT_R_L
NC_NB_CPU_A1_INT_L	MAKE_BASE=TRUE	NB_CPU_A1_INT_L
NC_NB_CPU_B0_INT_L	MAKE_BASE=TRUE	NB_CPU_B0_INT_L
NC_NB_CPU_B1_INT_L	MAKE_BASE=TRUE	NB_CPU_B1_INT_L

CONNECT CPU TO SHASTA SRESET A0, NC OTHERWISE

CPU_SRESET_L_R		SB_CPU_A0_SRESET_L
NOTUSED_CPU_A1_SRESET_L	MAKE_BASE=TRUE	SB_CPU_A1_SRESET_L
NOTUSED_CPU_B0_SRESET_L	MAKE_BASE=TRUE	SB_CPU_B0_SRESET_L
NOTUSED_CPU_B1_SRESET_L	MAKE_BASE=TRUE	SB_CPU_B1_SRESET_L

WIRE OUT KODIAK AND CPU SIGNALS FOR TP'S

TP_NB_B_TRIGGER_OUT		NB_B_TRIGGER_OUT
TP_NB_A_TRIGGER_OUT	MAKE_BASE=TRUE	NB_A_TRIGGER_OUT
TP_CPU_APSYNCOUT	MAKE_BASE=TRUE	CPU_APSYNCOUT
TP_CPU_TRIGGER_IN	MAKE_BASE=TRUE	CPU_TRIGGER_IN
TP_CPU_TRIGGER_OUT	MAKE_BASE=TRUE	CPU_TRIGGER_OUT
NC_PSRO	MAKE_BASE=TRUE	CPU_PSRO
NC_PSRO_ENABLE	MAKE_BASE=TRUE	CPU_PSRO_ENABLE
TP_CPU_ATTENTION	MAKE_BASE=TRUE	CPU_ATTENTION
NC_CPU_AFN	MAKE_BASE=TRUE	CPU_AFN

REMEMBER TO UPDATE NO_TEST PROPERTIES ON PG 6

CPU CHKSTOP OR MCP TO NB

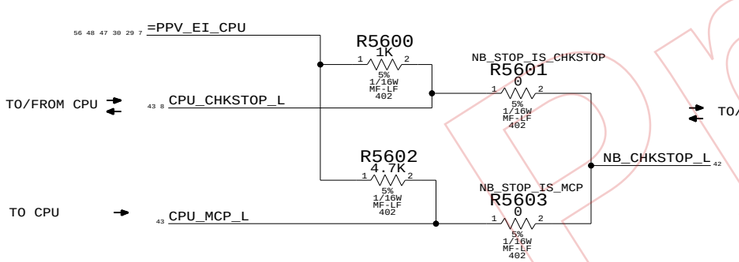

EI BUS AND SYSCLK CONSTRAINT LABELS

	ELECTRICAL_CONSTRAINT_SET	NET_SPACING_TYPE	NET_PHYSICAL_TYPE	DIFFERENTIAL_PAIR	
EI_CPU_TO_NB_CLK_P	EICNCLK	EI_CPU_TO_NB_CLK	EI_CPU_TO_NB_CLK	EI_CPU_TO_NB_CLK	128
EI_CPU_TO_NB_CLK_N	EICNCLK	EI_CPU_TO_NB_CLK	EI_CPU_TO_NB_CLK	EI_CPU_TO_NB_CLK	127
EI_CPU_TO_NB_AD<0..21>	EICNCAD	EI_CPU_TO_NB_AD	EI_CPU_TO_NB_AD		131
EI_CPU_TO_NB_SR_P<0..1>	EICNCSR	EI_CPU_TO_NB_AD	EI_CPU_TO_NB_AD		134
EI_CPU_TO_NB_SR_N<0..1>	EICNCSR	EI_CPU_TO_NB_AD	EI_CPU_TO_NB_AD		132
EI_NB_TO_CPU_CLK_P	EINCCLK	EI_NB_TO_CPU_CLK	EI_NB_TO_CPU_CLK	EI_NB_TO_CPU_CLK	
EI_NB_TO_CPU_CLK_N	EINCCLK	EI_NB_TO_CPU_CLK	EI_NB_TO_CPU_CLK	EI_NB_TO_CPU_CLK	129
EI_NB_TO_CPU_AD<0..43>	EINCCAD	EI_NB_TO_CPU_AD	EI_NB_TO_CPU_AD		138
EI_NB_TO_CPU_SR_P<0..1>	EINCCAD	EI_NB_TO_CPU_AD	EI_NB_TO_CPU_AD		135
EI_NB_TO_CPU_SR_N<0..1>	EINCCAD	EI_NB_TO_CPU_AD	EI_NB_TO_CPU_AD		136
					137
EI_NB_APSYNC	EIPNAPSYNC	EI_NB_TO_CPU_AD	EI_NB_TO_CPU_AD		
EI_CPU_APSYNC	EIPCAPSYNC	EI_NB_TO_CPU_AD	EI_NB_TO_CPU_AD		139
EI_CPU_SYSCLK_P	EIPCSYSCLK	EI_NB_TO_CPU_CLK	EI_NB_TO_CPU_CLK	EI_CPU_SYSCLK	138
EI_CPU_SYSCLK_N	EIPCSYSCLK	EI_NB_TO_CPU_CLK	EI_NB_TO_CPU_CLK	EI_CPU_SYSCLK	140
EI_NB_SYSCLK_P	EIPNSYSCLK_P	EI_NB_TO_CPU_CLK	EI_NB_TO_CPU_CLK	EI_NB_SYSCLK	141
EI_NB_SYSCLK_N	EIPNSYSCLK_N	EI_NB_TO_CPU_CLK	EI_NB_TO_CPU_CLK	EI_NB_SYSCLK	139
EI_CPU_TO_NB_AD<22>	EICNCAD_PP	EI_CPU_TO_NB_AD	EI_CPU_TO_NB_AD		142
					130
EI_CPU_TO_NB_AD<23..43>	EICNCAD	EI_CPU_TO_NB_AD	EI_CPU_TO_NB_AD		
					130

NC KODIAK EI B OUTPUT PORT

NC_EI_NB_TO_CPU_B_CLK_P		EI_NB_TO_CPU_B_CLK_P
NC_EI_NB_TO_CPU_B_CLK_N	MAKE_BASE=TRUE	EI_NB_TO_CPU_B_CLK_N
NC_EI_NB_TO_CPU_B_AD<0..43>	MAKE_BASE=TRUE	EI_NB_TO_CPU_B_AD<0..43>
NC_EI_NB_TO_CPU_B_SR_P<0..1>	MAKE_BASE=TRUE	EI_NB_TO_CPU_B_SR_P<0..1>
NC_EI_NB_TO_CPU_B_SR_N<0..1>	MAKE_BASE=TRUE	EI_NB_TO_CPU_B_SR_N<0..1>

NC KODIAK EI B INPUT PORT

NC_EI_CPU_B_TO_NB_CLK_P		EI_CPU_B_TO_NB_CLK_P
NC_EI_CPU_B_TO_NB_CLK_N	MAKE_BASE=TRUE	EI_CPU_B_TO_NB_CLK_N
NC_EI_CPU_B_TO_NB_AD<0..43>	MAKE_BASE=TRUE	EI_CPU_B_TO_NB_AD<0..43>
NC_EI_CPU_B_TO_NB_SR_P<0..1>	MAKE_BASE=TRUE	EI_CPU_B_TO_NB_SR_P<0..1>
NC_EI_CPU_B_TO_NB_SR_N<0..1>	MAKE_BASE=TRUE	EI_CPU_B_TO_NB_SR_N<0..1>

PULLUPS FOR SRESET'S FROM SHASTA

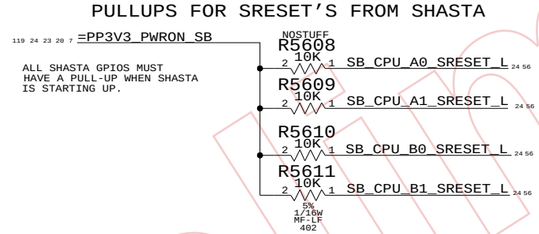

ALL SHASTA GPIOS MUST HAVE A PULL-UP WHEN SHASTA IS STARTING UP.

SRESET LEVEL-TRANSLATOR AND TWO-WAY GLITCH PROTECT

BUFFER LEVEL-SHIFTS SHASTA'S 3.3V PUSH-PULL SIGNAL TO CPU FOR FAST RISE/FALL TRANSITIONS. BUFFER HIGH-Z'S OUTPUT WHEN PROC VCORE NOT POWERED BUT OVDD IS, TO PROTECT OVDD-LEVEL OUTPUT FROM CPU SRESET PIN.

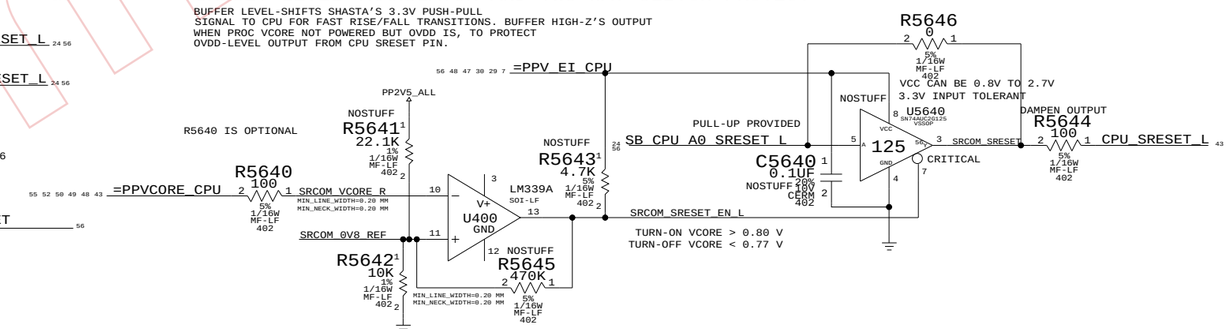

CPU ALIASES & MISC

SYNC_MASTER=FINO-HS SYNC_DATE=06/20/2005

NOTICE OF PROPRIETARY PROPERTY

THE INFORMATION CONTAINED HEREIN IS THE PROPRIETARY PROPERTY OF APPLE COMPUTER, INC. THE POSSESSOR AGREES TO THE FOLLOWING

I TO MAINTAIN THE DOCUMENT IN CONFIDENCE

II NOT TO REPRODUCE OR COPY IT

III NOT TO REVEAL OR PUBLISH IN WHOLE OR PART

APPLE COMPUTER INC.

SIZE	DRAWING NUMBER	REV.
D	051-6790	E
SCALE NONE	SHT 56 OF 154	

Preliminary

www.laptop-schematics.com

Q63: SEE P.20 FOR MORE DECOUPLING CAPS FOR THESE PINS.

Preliminary

www.laptop-schematics.com

KODIAC NBMEM PWR & CAPS

SYNC_MASTER=Q63 SYNC_DATE=08/01/2005

NOTICE OF PROPRIETARY PROPERTY

THE INFORMATION CONTAINED HEREIN IS THE PROPRIETARY PROPERTY OF APPLE COMPUTER, INC. THE POSSESSOR AGREES TO THE FOLLOWING

I TO MAINTAIN THE DOCUMENT IN CONFIDENCE

II NOT TO REPRODUCE OR COPY IT

III NOT TO REVEAL OR PUBLISH IN WHOLE OR PART

APPLE COMPUTER INC.

SIZE	DRAWING NUMBER	REV.
D	051-6790	E
SCALE NONE	SHT 58 OF 154	

LAST_MODIFIED=Tue Nov 1 14:56:09 2005

DRAWING

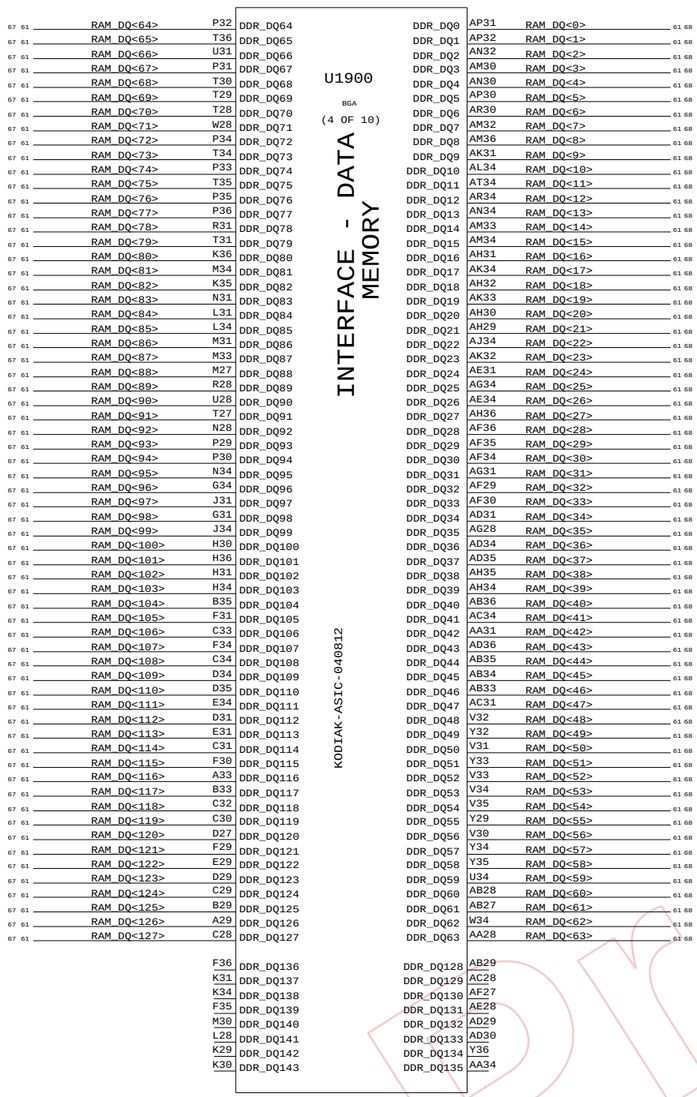

DQ/DQS OKAY TO TIE TO GROUND FOR THERMALS

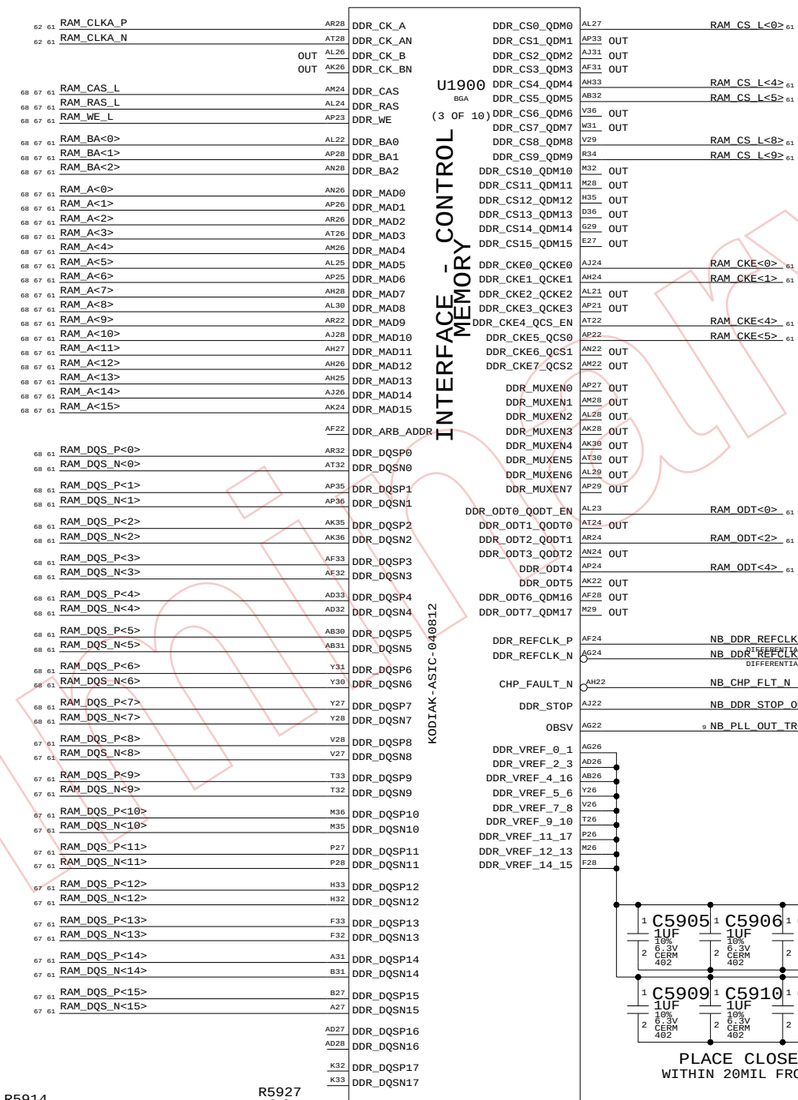

Kodiak 128bit CS/CKE/ODT mapping (Q63 style)

DIMM RANK	CS*	CKE	ODT	M23 Function	D bits
A0	0	0	0	onboard DRAM	0:63
A1	1	1	-	*unused*	0:63
B2	0	0	4	J6700 rank 1	64:127
B3	1	1	-	J6700 rank 2	64:127
C4	2	2	1	*unused*	0:63
C5	3	3	-	*unused*	0:63
D6	10	3	5	*unused*	64:127
D7	11	3	-	*unused*	64:127
E8	4	4	2	*unused*	0:63
E9	5	5	-	*unused*	0:63
F10	12	4	6	*unused*	64:127
F11	13	5	-	*unused*	64:127
G12	6	6	3	*unused*	0:63
G13	7	7	-	*unused*	0:63
H14	14	6	7	*unused*	64:127
H15	15	7	-	*unused*	64:127

Kodiak 128bit CS/CKE/ODT mapping (v1.1 only)

DIMM RANK	CS*	CKE	ODT	M23 Function	D bits
A0	0	0	0	onboard DRAM	0:63
A1	1	1	-	*unused*	0:63
B2	4	4	2	J6700 rank 1	64:127
B3	5	5	-	J6700 rank 2	64:127
C4	2	2	1	*unused*	0:63
C5	3	3	-	*unused*	0:63
D6	6	6	3	*unused*	64:127
D7	7	7	-	*unused*	64:127

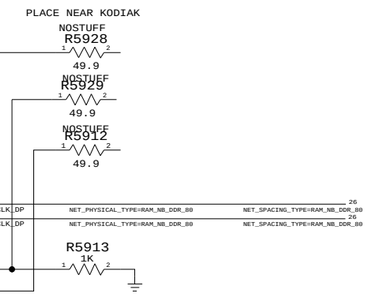

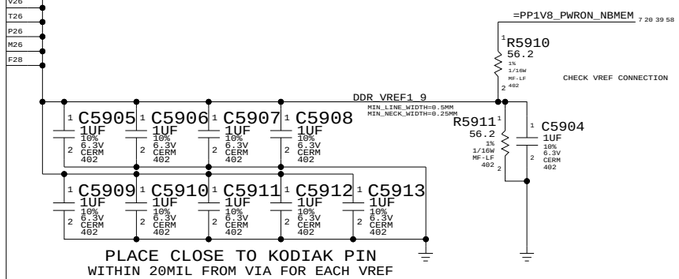

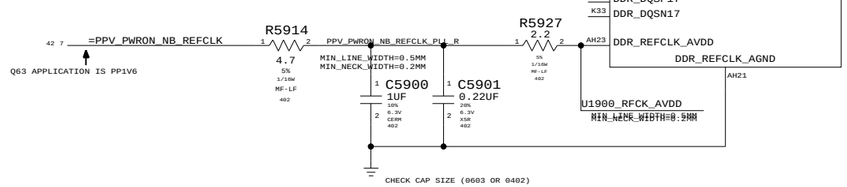

Kodiak Memory Dq/Ctl

SYNC_MASTER=FINO-DS SYNC_DATE=06/20/2005

NOTICE OF PROPRIETARY PROPERTY

THE INFORMATION CONTAINED HEREIN IS THE PROPRIETARY PROPERTY OF APPLE COMPUTER, INC. THE POSSESSOR AGREES TO THE FOLLOWING

I TO MAINTAIN THE DOCUMENT IN CONFIDENCE
II NOT TO REPRODUCE OR COPY IT
III NOT TO REVEAL OR PUBLISH IN WHOLE OR PART

APPLE COMPUTER INC.

SIZE	DRAWING NUMBER	REV.
D	051-6790	E
SCALE NONE	SHT 59 OF 154	

KODIAK MEMORY INTERFACE

Preliminary
www.laptop-schematics.com

ALL R PACKS ARE 1/16W 5%

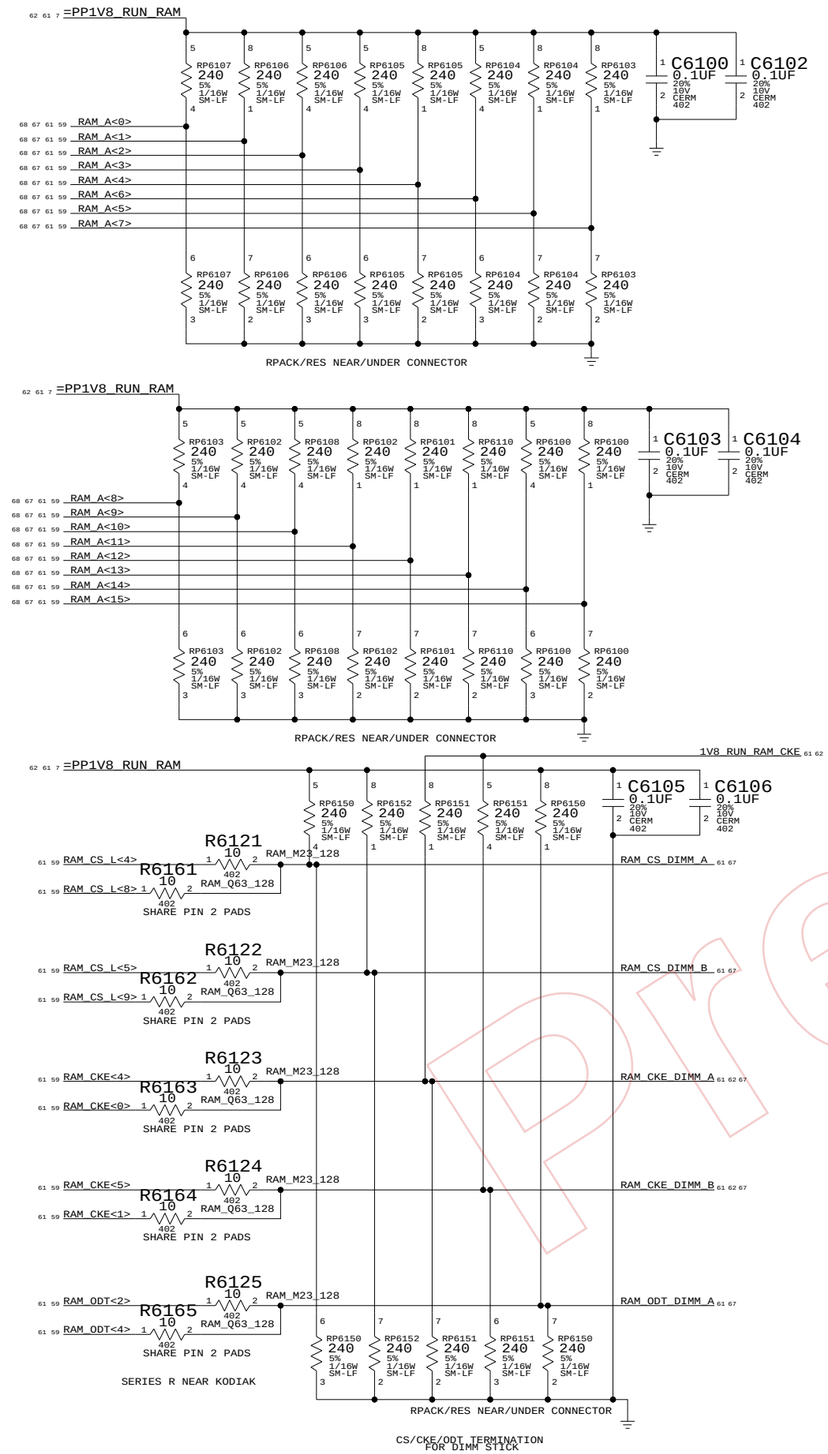

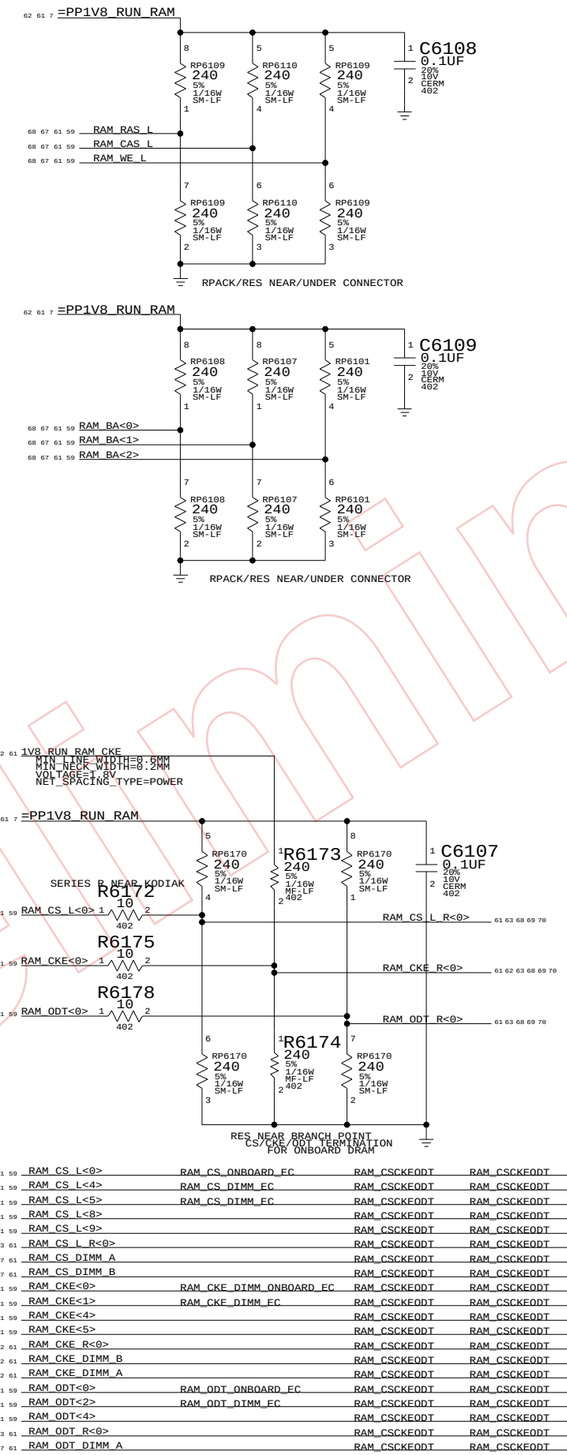

		ELECTRICAL_CONSTRAINT_SET	NET_PHYSICAL_TYPE	NET_SPACING_TYPE	DIFFERENTIAL_PAIR	
62 59	RAM_CLKA_P	RAM_KODIAK_CLK_EC	RAM_CLK	RAM_CLK	RAM_KODIAK_CLK_DP	2206
62 59	RAM_CLKA_N		RAM_CLK	RAM_CLK	RAM_KODIAK_CLK_DP	2207
67 62	RAM_DIMM_A_CLK_P0	RAM_DIMM_CLK_EC	RAM_CLK	RAM_CLK	RAM_DIMM_CLK0_DP	2210
67 62	RAM_DIMM_A_CLK_N0	RAM_DIMM_CLK_EC	RAM_CLK	RAM_CLK	RAM_DIMM_CLK0_DP	2211
67 62	RAM_DIMM_A_CLK_P1	RAM_DIMM_CLK_EC	RAM_CLK	RAM_CLK	RAM_DIMM_CLK1_DP	2212
67 62	RAM_DIMM_A_CLK_N1	RAM_DIMM_CLK_EC	RAM_CLK	RAM_CLK	RAM_DIMM_CLK1_DP	2213
67 62	RAM_DIMM_A_CLK_P2	RAM_DIMM_CLK_EC	RAM_CLK	RAM_CLK	RAM_DIMM_CLK2_DP	2214
67 62	RAM_DIMM_A_CLK_N2	RAM_DIMM_CLK_EC	RAM_CLK	RAM_CLK	RAM_DIMM_CLK2_DP	2215
69 62	RAM_ONBOARD_CLK_P0_1	RAM_ONBOARD_CLK_EC	RAM_CLK	RAM_CLK	RAM_ONBOARD_CLK0_DP	2216
69 62	RAM_ONBOARD_CLK_N0_1	RAM_ONBOARD_CLK_EC	RAM_CLK	RAM_CLK	RAM_ONBOARD_CLK0_DP	2217
69 62	RAM_ONBOARD_CLK_P2_3	RAM_ONBOARD_CLK_EC	RAM_CLK	RAM_CLK	RAM_ONBOARD_CLK2_DP	2218
69 62	RAM_ONBOARD_CLK_N2_3	RAM_ONBOARD_CLK_EC	RAM_CLK	RAM_CLK	RAM_ONBOARD_CLK2_DP	2219
70 62	RAM_ONBOARD_CLK_P4_5	RAM_ONBOARD_CLK_EC	RAM_CLK	RAM_CLK	RAM_ONBOARD_CLK4_DP	2220
70 62	RAM_ONBOARD_CLK_N4_5	RAM_ONBOARD_CLK_EC	RAM_CLK	RAM_CLK	RAM_ONBOARD_CLK4_DP	2221
70 62	RAM_ONBOARD_CLK_P6_7	RAM_ONBOARD_CLK_EC	RAM_CLK	RAM_CLK	RAM_ONBOARD_CLK6_DP	2222
70 62	RAM_ONBOARD_CLK_N6_7	RAM_ONBOARD_CLK_EC	RAM_CLK	RAM_CLK	RAM_ONBOARD_CLK6_DP	2223
62	RAM_CLK_FBIN_P	RAM_FB_CLK_EC	RAM_CLK	RAM_CLK	RAM_FBIN_CLK_DP	2224
62	RAM_CLK_FBIN_N		RAM_CLK	RAM_CLK	RAM_FBIN_CLK_DP	2225
62	RAM_CLK_FBOUT_P		RAM_CLK	RAM_CLK	RAM_FBOUT_CLK_DP	2226
62	RAM_CLK_FBOUT_N		RAM_CLK	RAM_CLK	RAM_FBOUT_CLK_DP	2227
68 59	RAM_DQ<7..0>	RAM_DQS0_EC	RAM_CAD	RAM_CAD		2248
68 59	RAM_DQS_P<0>	RAM_DQS0_EC	RAM_DQS	RAM_DQS	RAM_DQS_0_DP	2468
68 59	RAM_DQS_N<0>	RAM_DQS0_EC	RAM_DQS	RAM_DQS	RAM_DQS_0_DP	2470
68 59	RAM_DQ<15..8>	RAM_DQS1_EC	RAM_CAD	RAM_CAD		2252
68 59	RAM_DQS_P<1>	RAM_DQS1_EC	RAM_DQS	RAM_DQS	RAM_DQS_1_DP	2251
68 59	RAM_DQS_N<1>	RAM_DQS1_EC	RAM_DQS	RAM_DQS	RAM_DQS_1_DP	2471
68 59	RAM_DQ<23..16>	RAM_DQS2_EC	RAM_CAD	RAM_CAD		2254
68 59	RAM_DQS_P<2>	RAM_DQS2_EC	RAM_DQS	RAM_DQS	RAM_DQS_2_DP	2253
68 59	RAM_DQS_N<2>	RAM_DQS2_EC	RAM_DQS	RAM_DQS	RAM_DQS_2_DP	2472
68 59	RAM_DQ<31..24>	RAM_DQS3_EC	RAM_CAD	RAM_CAD		2256
68 59	RAM_DQS_P<3>	RAM_DQS3_EC	RAM_DQS	RAM_DQS	RAM_DQS_3_DP	2255
68 59	RAM_DQS_N<3>	RAM_DQS3_EC	RAM_DQS	RAM_DQS	RAM_DQS_3_DP	2473
68 59	RAM_DQ<39..32>	RAM_DQS4_EC	RAM_CAD	RAM_CAD		2258
68 59	RAM_DQS_P<4>	RAM_DQS4_EC	RAM_DQS	RAM_DQS	RAM_DQS_4_DP	2257
68 59	RAM_DQS_N<4>	RAM_DQS4_EC	RAM_DQS	RAM_DQS	RAM_DQS_4_DP	2474
68 59	RAM_DQ<47..40>	RAM_DQS5_EC	RAM_CAD	RAM_CAD		2260
68 59	RAM_DQS_P<5>	RAM_DQS5_EC	RAM_DQS	RAM_DQS	RAM_DQS_5_DP	2259
68 59	RAM_DQS_N<5>	RAM_DQS5_EC	RAM_DQS	RAM_DQS	RAM_DQS_5_DP	2475
68 59	RAM_DQ<55..48>	RAM_DQS6_EC	RAM_CAD	RAM_CAD		2262
68 59	RAM_DQS_P<6>	RAM_DQS6_EC	RAM_DQS	RAM_DQS	RAM_DQS_6_DP	2261
68 59	RAM_DQS_N<6>	RAM_DQS6_EC	RAM_DQS	RAM_DQS	RAM_DQS_6_DP	2476
68 59	RAM_DQ<63..56>	RAM_DQS7_EC	RAM_CAD	RAM_CAD		2264
68 59	RAM_DQS_P<7>	RAM_DQS7_EC	RAM_DQS	RAM_DQS	RAM_DQS_7_DP	2263
68 59	RAM_DQS_N<7>	RAM_DQS7_EC	RAM_DQS	RAM_DQS	RAM_DQS_7_DP	2477
67 59	RAM_DQ<71..64>	RAM_DQS8_EC	RAM_CAD	RAM_CAD		2267
67 59	RAM_DQS_P<8>	RAM_DQS8_EC	RAM_DQS	RAM_DQS	RAM_DQS_8_DP	2265
67 59	RAM_DQS_N<8>	RAM_DQS8_EC	RAM_DQS	RAM_DQS	RAM_DQS_8_DP	2478
67 59	RAM_DQ<79..72>	RAM_DQS9_EC	RAM_CAD	RAM_CAD		2268
67 59	RAM_DQS_P<9>	RAM_DQS9_EC	RAM_DQS	RAM_DQS	RAM_DQS_9_DP	2266
67 59	RAM_DQS_N<9>	RAM_DQS9_EC	RAM_DQS	RAM_DQS	RAM_DQS_9_DP	2479
67 59	RAM_DQ<87..80>	RAM_DQS10_EC	RAM_CAD	RAM_CAD		2269
67 59	RAM_DQS_P<10>	RAM_DQS10_EC	RAM_DQS	RAM_DQS	RAM_DQS_10_DP	2270
67 59	RAM_DQS_N<10>	RAM_DQS10_EC	RAM_DQS	RAM_DQS	RAM_DQS_10_DP	2480
67 59	RAM_DQ<95..88>	RAM_DQS11_EC	RAM_CAD	RAM_CAD		2271
67 59	RAM_DQS_P<11>	RAM_DQS11_EC	RAM_DQS	RAM_DQS	RAM_DQS_11_DP	2272
67 59	RAM_DQS_N<11>	RAM_DQS11_EC	RAM_DQS	RAM_DQS	RAM_DQS_11_DP	2481
67 59	RAM_DQ<103..96>	RAM_DQS12_EC	RAM_CAD	RAM_CAD		2273
67 59	RAM_DQS_P<12>	RAM_DQS12_EC	RAM_DQS	RAM_DQS	RAM_DQS_12_DP	2274
67 59	RAM_DQS_N<12>	RAM_DQS12_EC	RAM_DQS	RAM_DQS	RAM_DQS_12_DP	2482
67 59	RAM_DQ<111..104>	RAM_DQS13_EC	RAM_CAD	RAM_CAD		2277
67 59	RAM_DQS_P<13>	RAM_DQS13_EC	RAM_DQS	RAM_DQS	RAM_DQS_13_DP	2275
67 59	RAM_DQS_N<13>	RAM_DQS13_EC	RAM_DQS	RAM_DQS	RAM_DQS_13_DP	2483
67 59	RAM_DQ<119..112>	RAM_DQS14_EC	RAM_CAD	RAM_CAD		2278
67 59	RAM_DQS_P<14>	RAM_DQS14_EC	RAM_DQS	RAM_DQS	RAM_DQS_14_DP	2276
67 59	RAM_DQS_N<14>	RAM_DQS14_EC	RAM_DQS	RAM_DQS	RAM_DQS_14_DP	2484
67 59	RAM_DQ<127..120>	RAM_DQS15_EC	RAM_CAD	RAM_CAD		2279
67 59	RAM_DQS_P<15>	RAM_DQS15_EC	RAM_DQS	RAM_DQS	RAM_DQS_15_DP	2280
67 59	RAM_DQS_N<15>	RAM_DQS15_EC	RAM_DQS	RAM_DQS	RAM_DQS_15_DP	2485
70 69 68 6	RAM_DQ_R<127..0>		RAM_CAD	RAM_CAD		2234
70 69 68	RAM_DQS_P_R<15..0>		RAM_DQS	RAM_DQS		2486
70 69 68	RAM_DQS_N_R<15..0>		RAM_DQS	RAM_DQS		2488
68 67 61 59	RAM_A<15..14>	RAM_A_CTL_EC	RAM_CAD	RAM_CAD		2572
68 67 61 59	RAM_A<13..0>	RAM_A_CTL_EC	RAM_CAD	RAM_CAD		2236
68 67 61 59	RAM_BA<1..0>	RAM_A_CTL_EC	RAM_CAD	RAM_CAD		2238
68 67 61 59	RAM_BA<2>	RAM_A_CTL_1_EC	RAM_CAD	RAM_CAD		2573
68 67 61 59	RAM_RAS_L	RAM_A_CTL_EC	RAM_CAD	RAM_CAD		2237
68 67 61 59	RAM_CAS_L	RAM_A_CTL_EC	RAM_CAD	RAM_CAD		2239
68 67 61 59	RAM_WE_L	RAM_A_CTL_EC	RAM_CAD	RAM_CAD		2240
70 69 68 63	RAM_A_R<15..0>		RAM_CAD	RAM_CAD		2486
70 69 68 63	RAM_BA_R<2..0>		RAM_CAD	RAM_CAD		2484
70 69 68 63	RAM_RAS_L_R		RAM_CAD	RAM_CAD		2483
70 69 68 63	RAM_CAS_L_R		RAM_CAD	RAM_CAD		2482
70 69 68 63	RAM_WE_L_R		RAM_CAD	RAM_CAD		2481

61 59	RAM_CS_L<0>	RAM_CS_ONBOARD_EC	RAM_CSCKEODT	RAM_CSCKEODT	2243
61 59	RAM_CS_L<4>	RAM_CS_DIMM_EC	RAM_CSCKEODT	RAM_CSCKEODT	2487
61 59	RAM_CS_L<5>	RAM_CS_DIMM_EC	RAM_CSCKEODT	RAM_CSCKEODT	2242
61 59	RAM_CS_L<8>		RAM_CSCKEODT	RAM_CSCKEODT	2246
61 59	RAM_CS_L<9>		RAM_CSCKEODT	RAM_CSCKEODT	2244
70 69 68 63 61	RAM_CS_L_R<0>		RAM_CSCKEODT	RAM_CSCKEODT	2238
67 61	RAM_CS_DIMM_A		RAM_CSCKEODT	RAM_CSCKEODT	2241
67 61	RAM_CS_DIMM_B		RAM_CSCKEODT	RAM_CSCKEODT	2575
61 59	RAM_CKE<0>	RAM_CKE_DIMM_ONBOARD_EC	RAM_CSCKEODT	RAM_CSCKEODT	2234
61 59	RAM_CKE<1>	RAM_CKE_DIMM_EC	RAM_CSCKEODT	RAM_CSCKEODT	2236
61 59	RAM_CKE<4>		RAM_CSCKEODT	RAM_CSCKEODT	2235
61 59	RAM_CKE<5>		RAM_CSCKEODT	RAM_CSCKEODT	2237
70 69 68 63 62 61	RAM_CKE_R<0>		RAM_CSCKEODT	RAM_CSCKEODT	2236
67 62 61	RAM_CKE_DIMM_B		RAM_CSCKEODT	RAM_CSCKEODT	1592
67 62 61	RAM_CKE_DIMM_A		RAM_CSCKEODT	RAM_CSCKEODT	2232
61 59	RAM_ODT<0>	RAM_ODT_ONBOARD_EC	RAM_CSCKEODT	RAM_CSCKEODT	1674
61 59	RAM_ODT<2>	RAM_ODT_DIMM_EC	RAM_CSCKEODT	RAM_CSCKEODT	1676
61 59	RAM_ODT<4>		RAM_CSCKEODT	RAM_CSCKEODT	1677
70 69 68 63 61	RAM_ODT_R<0>		RAM_CSCKEODT	RAM_CSCKEODT	1693
67 61	RAM_ODT_DIMM_A		RAM_CSCKEODT	RAM_CSCKEODT	1694

RAM_CLK PRIMARY SPACING SET BASED ON DIFF IMPEDANCE
RAM_CLK LINE-LINE SPACING SET TO 15MIL
TOTAL LENGTH TOLERENCE = 20PS = 2.82MM

RAM_CAD SPACING IS 10MIL

Parallel Term

SYNC_MASTER=FINO-DS SYNC_DATE=06/20/2005

NOTICE OF PROPRIETARY PROPERTY

THE INFORMATION CONTAINED HEREIN IS THE PROPRIETARY PROPERTY OF APPLE COMPUTER, INC. THE POSSESSOR AGREES TO THE FOLLOWING

I TO MAINTAIN THE DOCUMENT IN CONFIDENCE

II NOT TO REPRODUCE OR COPY IT

III NOT TO REVEAL OR PUBLISH IN WHOLE OR PART

APPLE COMPUTER INC.

SIZE	DRAWING NUMBER	REV.
D	051-6790	E
SCALE NONE	SHT 61 OF 154	

Preliminary
www.laptop-schematics.com

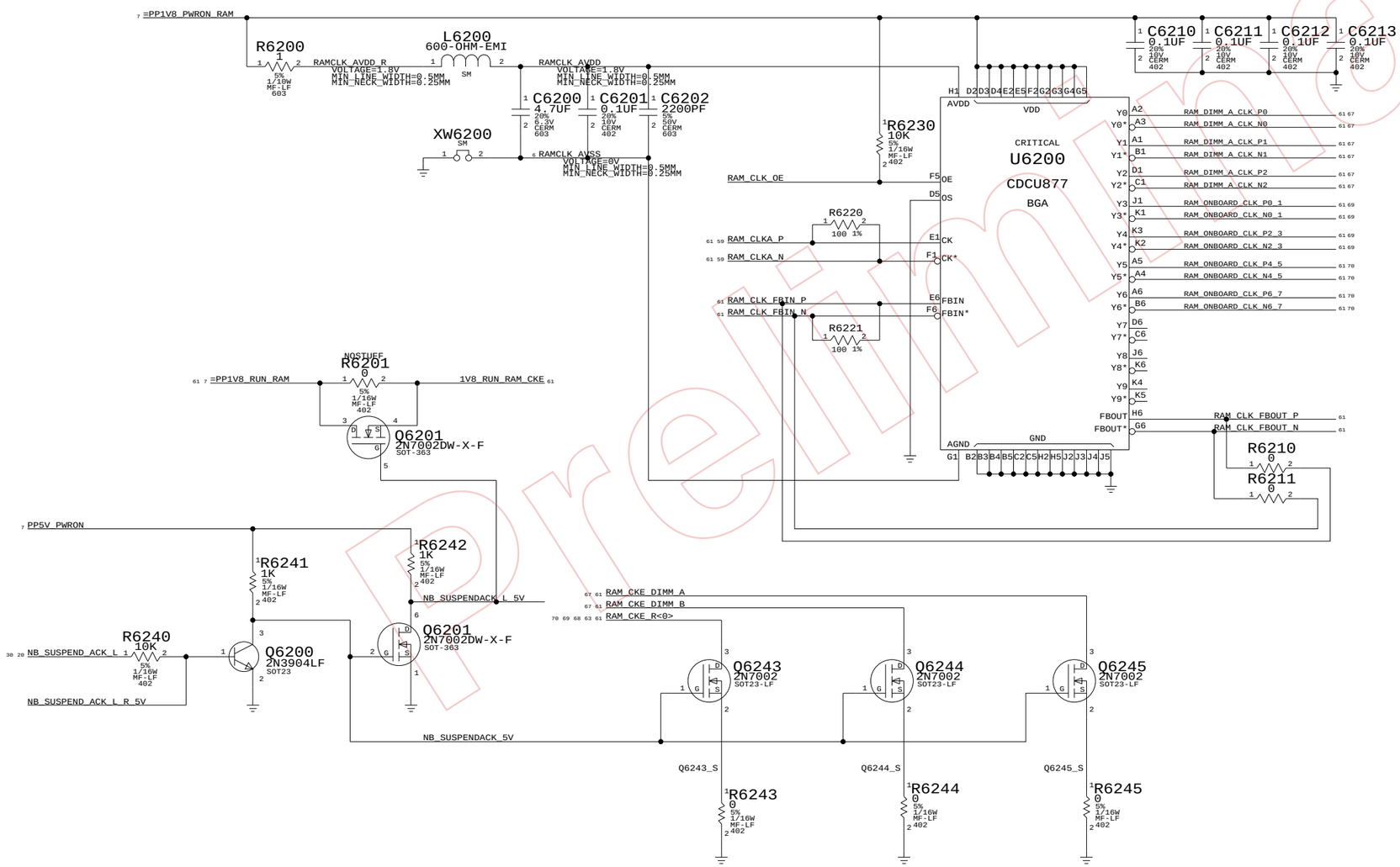

Main Memory Clock Buffer

SYNC_MASTER=FINO-DS SYNC_DATE=06/20/2005

NOTICE OF PROPRIETARY PROPERTY

THE INFORMATION CONTAINED HEREIN IS THE PROPRIETARY PROPERTY OF APPLE COMPUTER, INC. THE POSSESSOR AGREES TO THE FOLLOWING

I TO MAINTAIN THE DOCUMENT IN CONFIDENCE

II NOT TO REPRODUCE OR COPY IT

III NOT TO REVEAL OR PUBLISH IN WHOLE OR PART

APPLE COMPUTER INC.

SIZE	DRAWING NUMBER	REV.
D	051-6790	E
SCALE NONE	SHT 62 OF 154	

Preliminary

www.laptop-schematics.com

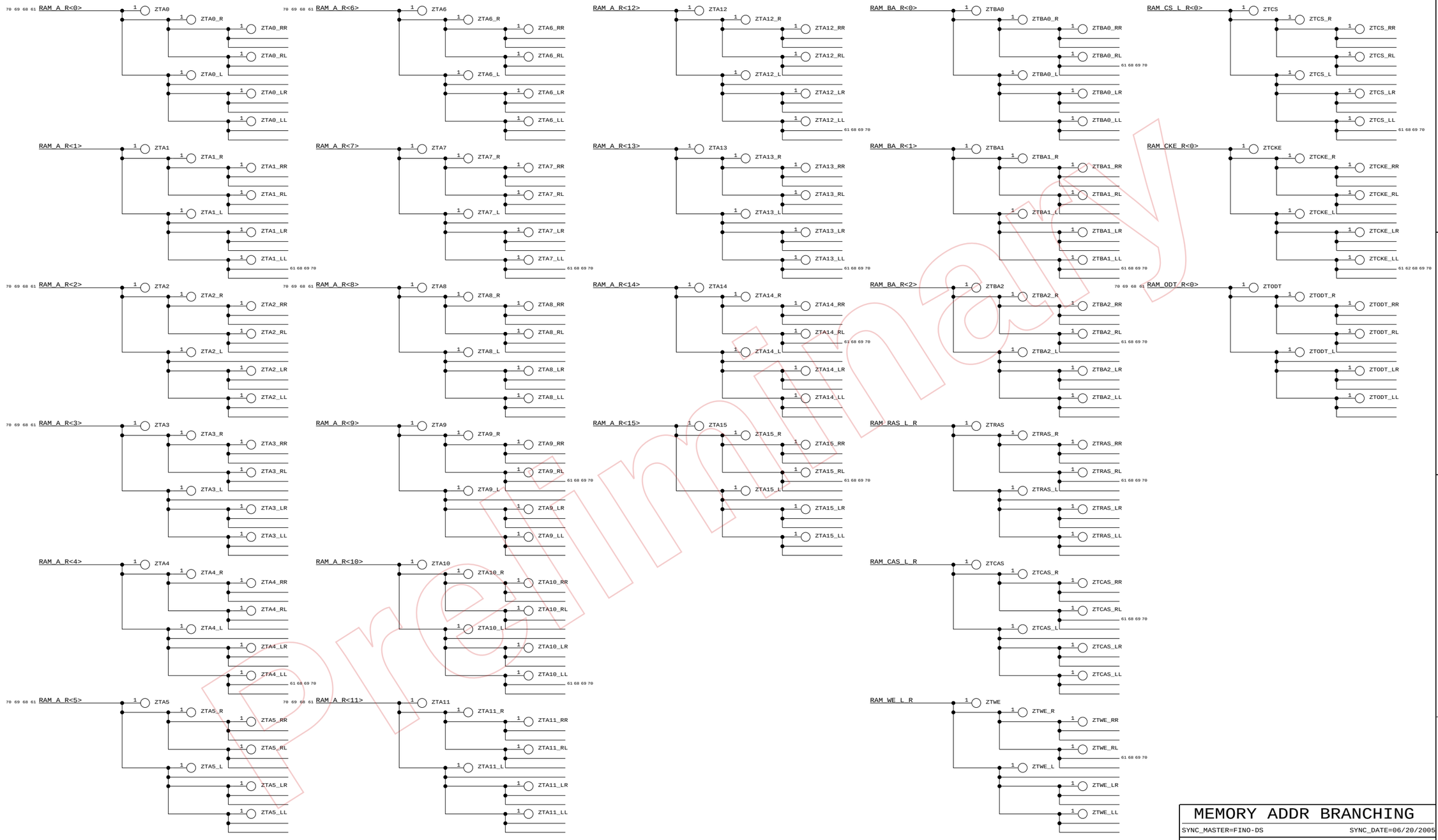

MEMORY ADDR BRANCHING

SYNC_MASTER=FINO-DS SYNC_DATE=06/20/2005

NOTICE OF PROPRIETARY PROPERTY

THE INFORMATION CONTAINED HEREIN IS THE PROPRIETARY PROPERTY OF APPLE COMPUTER, INC. THE POSSESSOR AGREES TO THE FOLLOWING

I TO MAINTAIN THE DOCUMENT IN CONFIDENCE

II NOT TO REPRODUCE OR COPY IT

III NOT TO REVEAL OR PUBLISH IN WHOLE OR PART

APPLE COMPUTER INC.

SIZE	DRAWING NUMBER	REV.
D	051-6790	E
SCALE NONE	SHT 63 OF 154	

Preliminary

www.laptop-schematics.com

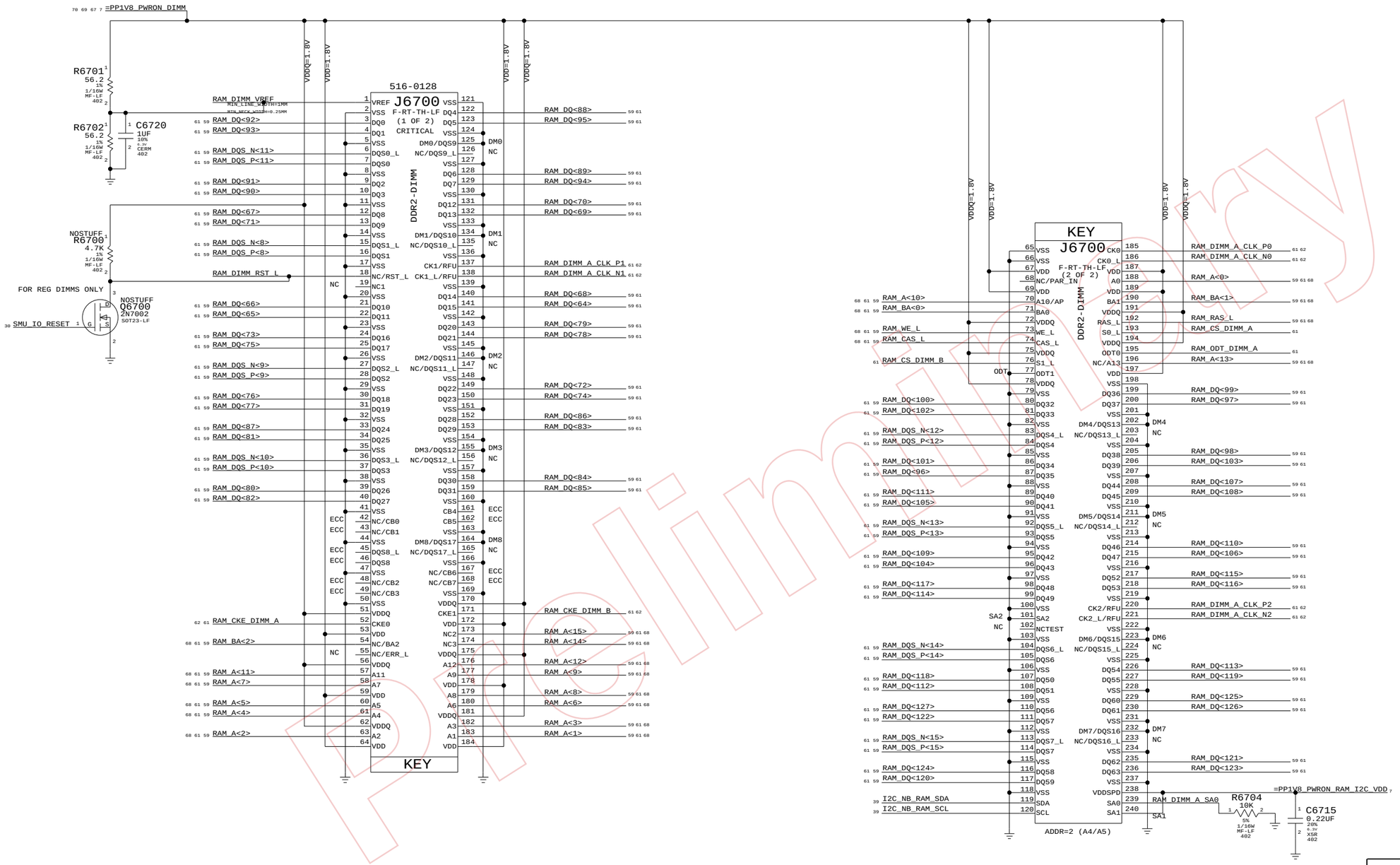

PLACE CAPS CLOSE TO VDD/VDDQ PINS OF DIMM SOCKET

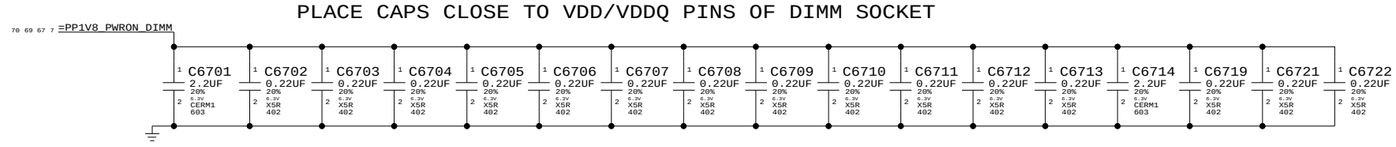

Memory Dimm A

SYNC_MASTER=FINO-DS SYNC_DATE=06/20/2005

NOTICE OF PROPRIETARY PROPERTY

THE INFORMATION CONTAINED HEREIN IS THE PROPRIETARY PROPERTY OF APPLE COMPUTER, INC. THE POSSESSOR AGREES TO THE FOLLOWING

I TO MAINTAIN THE DOCUMENT IN CONFIDENCE

II NOT TO REPRODUCE OR COPY IT

III NOT TO REVEAL OR PUBLISH IN WHOLE OR PART

APPLE COMPUTER INC.

SIZE	DRAWING NUMBER	REV.
D	051-6790	E

SCALE NONE SHT 67 OF 154

www.laptop-schematics.com

ONBOARD MEMORY SHOULD FOLLOW SPEC FOR RAW CARD VERSION A

61 59	RAM_DQ<0>	22	4	5	RP6800	RAM_DQ_R<0>	61 69
61 59	RAM_DQ<1>	22	3	6	RP6800	RAM_DQ_R<1>	6 61 69
61 59	RAM_DQ<2>	22	1	8	RP6801	RAM_DQ_R<2>	6 61 69
61 59	RAM_DQ<3>	22	3	6	RP6801	RAM_DQ_R<3>	6 61 69
61 59	RAM_DQ<4>	22	4	5	RP6801	RAM_DQ_R<4>	61 69
61 59	RAM_DQ<5>	22	2	7	RP6800	RAM_DQ_R<5>	6 61 69
61 59	RAM_DQ<6>	22	2	7	RP6801	RAM_DQ_R<6>	6 61 69
61 59	RAM_DQ<7>	22	1	8	RP6800	RAM_DQ_R<7>	6 61 69
61 59	RAM_DQ<8>	22	3	6	RP6802	RAM_DQ_R<8>	6 61 69
61 59	RAM_DQ<9>	22	4	5	RP6803	RAM_DQ_R<9>	6 61 69
61 59	RAM_DQ<10>	22	1	8	RP6803	RAM_DQ_R<10>	61 69
61 59	RAM_DQ<11>	22	4	5	RP6802	RAM_DQ_R<11>	6 61 69
61 59	RAM_DQ<12>	22	3	6	RP6803	RAM_DQ_R<12>	6 61 69
61 59	RAM_DQ<13>	22	2	7	RP6802	RAM_DQ_R<13>	6 61 69
61 59	RAM_DQ<14>	22	2	7	RP6803	RAM_DQ_R<14>	6 61 69
61 59	RAM_DQ<15>	22	1	8	RP6802	RAM_DQ_R<15>	61 69
61 59	RAM_DQ<16>	22	3	6	RP6805	RAM_DQ_R<16>	6 61 69
61 59	RAM_DQ<17>	22	4	5	RP6805	RAM_DQ_R<17>	6 61 69
61 59	RAM_DQ<18>	22	1	8	RP6804	RAM_DQ_R<18>	61 69
61 59	RAM_DQ<19>	22	2	7	RP6805	RAM_DQ_R<19>	6 61 69
61 59	RAM_DQ<20>	22	2	7	RP6804	RAM_DQ_R<20>	6 61 69
61 59	RAM_DQ<21>	22	4	5	RP6804	RAM_DQ_R<21>	6 61 69
61 59	RAM_DQ<22>	22	3	6	RP6804	RAM_DQ_R<22>	6 61 69
61 59	RAM_DQ<23>	22	1	8	RP6805	RAM_DQ_R<23>	61 69
61 59	RAM_DQ<24>	22	4	5	RP6807	RAM_DQ_R<24>	6 61 69
61 59	RAM_DQ<25>	22	2	7	RP6806	RAM_DQ_R<25>	6 61 69
61 59	RAM_DQ<26>	22	4	5	RP6806	RAM_DQ_R<26>	61 69
61 59	RAM_DQ<27>	22	1	8	RP6807	RAM_DQ_R<27>	61 69
61 59	RAM_DQ<28>	22	3	6	RP6807	RAM_DQ_R<28>	6 61 69
61 59	RAM_DQ<29>	22	3	6	RP6806	RAM_DQ_R<29>	6 61 69
61 59	RAM_DQ<30>	22	2	7	RP6807	RAM_DQ_R<30>	6 61 69
61 59	RAM_DQ<31>	22	1	8	RP6806	RAM_DQ_R<31>	6 61 69
61 59	RAM_DQ<32>	22	4	5	RP6809	RAM_DQ_R<32>	6 61 70
61 59	RAM_DQ<33>	22	2	7	RP6808	RAM_DQ_R<33>	6 61 70
61 59	RAM_DQ<34>	22	3	6	RP6808	RAM_DQ_R<34>	6 61 70
61 59	RAM_DQ<35>	22	1	8	RP6809	RAM_DQ_R<35>	61 70
61 59	RAM_DQ<36>	22	2	7	RP6809	RAM_DQ_R<36>	6 61 70
61 59	RAM_DQ<37>	22	1	8	RP6808	RAM_DQ_R<37>	6 61 70
61 59	RAM_DQ<38>	22	3	6	RP6809	RAM_DQ_R<38>	6 61 70
61 59	RAM_DQ<39>	22	4	5	RP6808	RAM_DQ_R<39>	61 70
61 59	RAM_DQ<40>	22	4	5	RP6810	RAM_DQ_R<40>	6 61 70
61 59	RAM_DQ<41>	22	3	6	RP6811	RAM_DQ_R<41>	6 61 70
61 59	RAM_DQ<42>	22	1	8	RP6811	RAM_DQ_R<42>	61 70
61 59	RAM_DQ<43>	22	2	7	RP6810	RAM_DQ_R<43>	6 61 70
61 59	RAM_DQ<44>	22	4	5	RP6811	RAM_DQ_R<44>	6 61 70
61 59	RAM_DQ<45>	22	3	6	RP6810	RAM_DQ_R<45>	6 61 70
61 59	RAM_DQ<46>	22	2	7	RP6811	RAM_DQ_R<46>	6 61 70
61 59	RAM_DQ<47>	22	1	8	RP6810	RAM_DQ_R<47>	61 70
61 59	RAM_DQ<48>	22	3	6	RP6812	RAM_DQ_R<48>	6 61 70
61 59	RAM_DQ<49>	22	4	5	RP6812	RAM_DQ_R<49>	6 61 70
61 59	RAM_DQ<50>	22	2	7	RP6813	RAM_DQ_R<50>	6 61 70
61 59	RAM_DQ<51>	22	1	8	RP6813	RAM_DQ_R<51>	61 70
61 59	RAM_DQ<52>	22	3	6	RP6813	RAM_DQ_R<52>	6 61 70
61 59	RAM_DQ<53>	22	4	5	RP6813	RAM_DQ_R<53>	6 61 70
61 59	RAM_DQ<54>	22	2	7	RP6812	RAM_DQ_R<54>	6 61 70
61 59	RAM_DQ<55>	22	1	8	RP6812	RAM_DQ_R<55>	61 70
61 59	RAM_DQ<56>	22	3	6	RP6814	RAM_DQ_R<56>	6 61 70
61 59	RAM_DQ<57>	22	4	5	RP6815	RAM_DQ_R<57>	6 61 70
61 59	RAM_DQ<58>	22	2	7	RP6815	RAM_DQ_R<58>	6 61 70
61 59	RAM_DQ<59>	22	3	6	RP6815	RAM_DQ_R<59>	6 61 70
61 59	RAM_DQ<60>	22	2	7	RP6814	RAM_DQ_R<60>	6 61 70
61 59	RAM_DQ<61>	22	1	8	RP6814	RAM_DQ_R<61>	61 70
61 59	RAM_DQ<62>	22	1	8	RP6815	RAM_DQ_R<62>	61 70
61 59	RAM_DQ<63>	22	4	5	RP6814	RAM_DQ_R<63>	6 61 70

61 59	RAM_DQS_P<0>	22	1	2	R6800	DIFFERENTIAL PAIR	RAM_DQS_P_R<0>	61 69
61 59	RAM_DQS_N<0>	22	1	2	R6810	DIFFERENTIAL PAIR	RAM_DQS_N_R<0>	61 69
61 59	RAM_DQS_P<1>	22	1	2	R6801	DIFFERENTIAL PAIR	RAM_DQS_P_R<1>	61 69
61 59	RAM_DQS_N<1>	22	1	2	R6811	DIFFERENTIAL PAIR	RAM_DQS_N_R<1>	61 69
61 59	RAM_DQS_P<2>	22	1	2	R6802	DIFFERENTIAL PAIR	RAM_DQS_P_R<2>	61 69
61 59	RAM_DQS_N<2>	22	1	2	R6812	DIFFERENTIAL PAIR	RAM_DQS_N_R<2>	61 69
61 59	RAM_DQS_P<3>	22	1	2	R6803	DIFFERENTIAL PAIR	RAM_DQS_P_R<3>	61 69
61 59	RAM_DQS_N<3>	22	1	2	R6813	DIFFERENTIAL PAIR	RAM_DQS_N_R<3>	61 69
61 59	RAM_DQS_P<4>	22	1	2	R6804	DIFFERENTIAL PAIR	RAM_DQS_P_R<4>	61 70
61 59	RAM_DQS_N<4>	22	1	2	R6814	DIFFERENTIAL PAIR	RAM_DQS_N_R<4>	61 70
61 59	RAM_DQS_P<5>	22	1	2	R6805	DIFFERENTIAL PAIR	RAM_DQS_P_R<5>	61 70
61 59	RAM_DQS_N<5>	22	1	2	R6815	DIFFERENTIAL PAIR	RAM_DQS_N_R<5>	61 70
61 59	RAM_DQS_P<6>	22	1	2	R6806	DIFFERENTIAL PAIR	RAM_DQS_P_R<6>	61 70
61 59	RAM_DQS_N<6>	22	1	2	R6816	DIFFERENTIAL PAIR	RAM_DQS_N_R<6>	61 70
61 59	RAM_DQS_P<7>	22	1	2	R6807	DIFFERENTIAL PAIR	RAM_DQS_P_R<7>	61 70
61 59	RAM_DQS_N<7>	22	1	2	R6817	DIFFERENTIAL PAIR	RAM_DQS_N_R<7>	61 70

67 61 59	RAM_A<0>	5.1	1	8	RP6824	RAM_A_R<0>	61 63 69 70	1 ZT6800
67 61 59	RAM_A<1>	5.1	1	8	RP6823	RAM_A_R<1>	61 63 69 70	1 ZT6801
67 61 59	RAM_A<2>	5.1	2	7	RP6823	RAM_A_R<2>	61 63 69 70	1 ZT6802
67 61 59	RAM_A<3>	5.1	4	5	RP6822	RAM_A_R<3>	61 63 69 70	1 ZT6803
67 61 59	RAM_A<4>	5.1	3	6	RP6822	RAM_A_R<4>	61 63 69 70	1 ZT6804
67 61 59	RAM_A<5>	5.1	2	7	RP6822	RAM_A_R<5>	61 63 69 70	1 ZT6805
67 61 59	RAM_A<6>	5.1	1	8	RP6822	RAM_A_R<6>	61 63 69 70	1 ZT6806
67 61 59	RAM_A<7>	5.1	3	6	RP6821	RAM_A_R<7>	61 63 69 70	1 ZT6807
67 61 59	RAM_A<8>	5.1	4	5	RP6821	RAM_A_R<8>	61 63 69 70	1 ZT6808
67 61 59	RAM_A<9>	5.1	1	8	RP6821	RAM_A_R<9>	61 63 69 70	1 ZT6809
67 61 59	RAM_A<10>	5.1	3	6	RP6824	RAM_A_R<10>	61 63 69 70	1 ZT6810
67 61 59	RAM_A<11>	5.1	2	7	RP6821	RAM_A_R<11>	61 63 69 70	1 ZT6811
67 61 59	RAM_A<12>	5.1	4	5	RP6820	RAM_A_R<12>	61 63 69 70	1 ZT6812
67 61 59	RAM_A<13>	5.1	4	5	RP6825	RAM_A_R<13>	61 63 69 70	1 ZT6813
67 61 59	RAM_A<14>	5.1	2	7	RP6820	RAM_A_R<14>	61 63 69 70	1 ZT6814
67 61 59	RAM_A<15>	5.1	1	8	RP6820	RAM_A_R<15>	61 63 69 70	1 ZT6815

VIAS FOR ECC STUB

67 61 59	RAM_BA<0>	5.1	4	5	RP6824	RAM_BA_R<0>	61 63 69 70	1 ZT6820
67 61 59	RAM_BA<1>	5.1	2	7	RP6824	RAM_BA_R<1>	61 63 69 70	ZT6821
67 61 59	RAM_BA<2>	5.1	3	6	RP6820	RAM_BA_R<2>	61 63 69 70	1 ZT6822
67 61 59	RAM_RAS_L	5.1	1	8	RP6825	RAM_RAS_L_R	61 63 69 70	1 ZT6825
67 61 59	RAM_CAS_L	5.1	3	6	RP6825	RAM_CAS_L_R	61 63 69 70	1 ZT6826
67 61 59	RAM_WE_L	5.1	2	7	RP6825	RAM_WE_L_R	61 63 69 70	1 ZT6827

VIAS FOR ECC STUB

PLACE NEAR KODIAK PRIOR TO BRANCH

PLACE AT END POINT TO SIMULATE ECC

C6870 24PF 5% 50V C0G 402		RAM_CS_L_R<0> 61 63 69 70	C6871 2PF +/-0.25PF 50V C0G 402-1
C6880 24PF 5% 50V C0G 402		RAM_CKE_R<0> 61 62 63 69 70	C6881 2PF +/-0.25PF 50V C0G 402-1
C6890 24PF 5% 50V C0G 402		RAM_ODT_R<0> 61 63 69 70	C6891 2PF +/-0.25PF 50V C0G 402-1

Preliminary

www.laptop-schematics.com

MLB Mem Series Term

SYNC_MASTER=FINO-DS SYNC_DATE=06/20/2005

NOTICE OF PROPRIETARY PROPERTY

THE INFORMATION CONTAINED HEREIN IS THE PROPRIETARY PROPERTY OF APPLE COMPUTER, INC. THE POSSESSOR AGREES TO THE FOLLOWING

I TO MAINTAIN THE DOCUMENT IN CONFIDENCE

II NOT TO REPRODUCE OR COPY IT

III NOT TO REVEAL OR PUBLISH IN WHOLE OR PART

APPLE COMPUTER INC.

SIZE	DRAWING NUMBER	REV.
D	051-6790	E
SCALE NONE	SHT 68 OF 154	

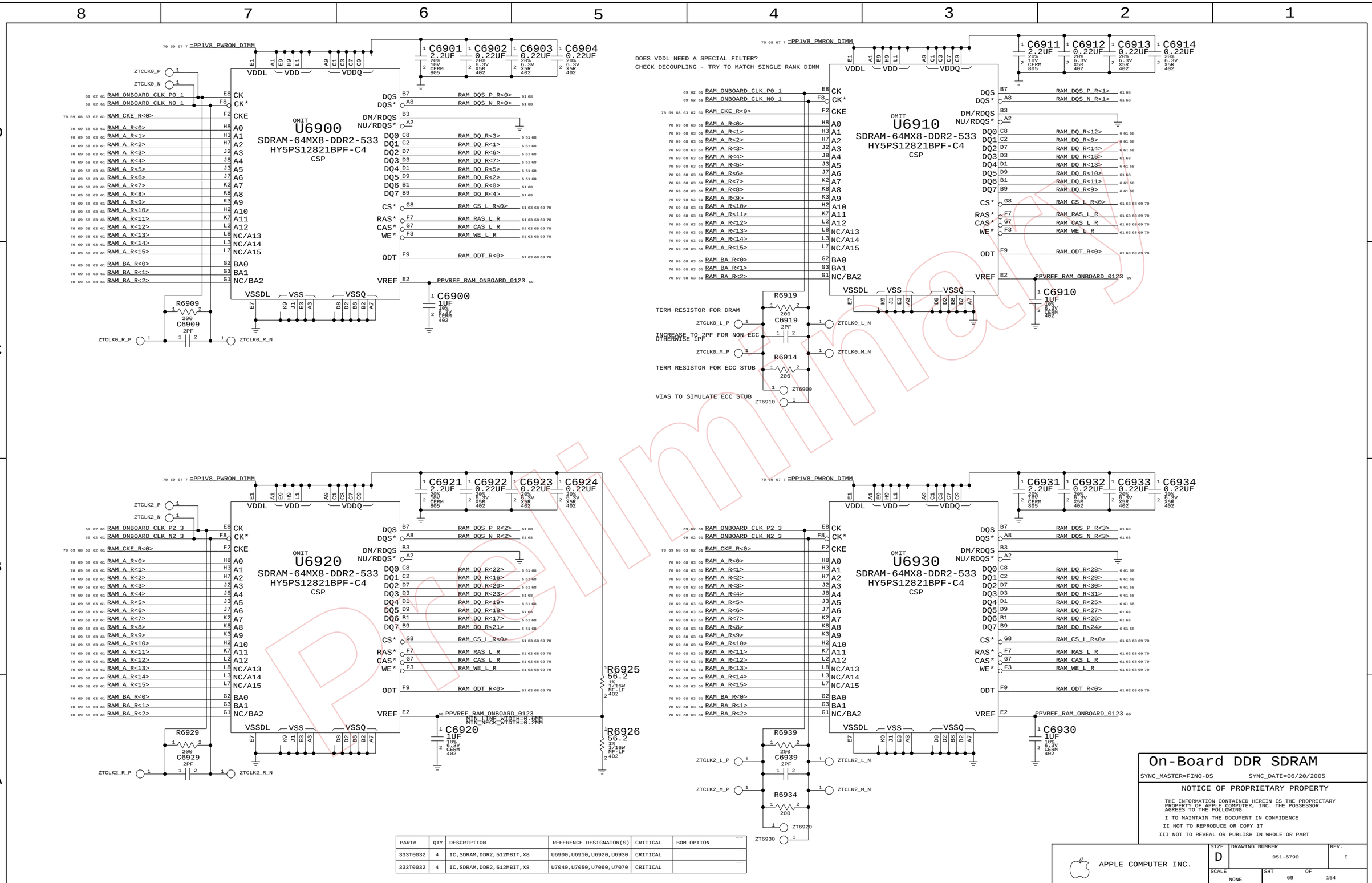

PART#	QTY	DESCRIPTION	REFERENCE DESIGNATOR(S)	CRITICAL	BOM OPTION
333T0032	4	IC,SDRAM,DDR2,512MBIT,X8	U6900,U6910,U6920,U6930	CRITICAL	
333T0032	4	IC,SDRAM,DDR2,512MBIT,X8	U7040,U7050,U7060,U7070	CRITICAL	

On-Board DDR SDRAM

SYNC_MASTER=FINO-DS SYNC_DATE=06/20/2005

NOTICE OF PROPRIETARY PROPERTY

THE INFORMATION CONTAINED HEREIN IS THE PROPRIETARY PROPERTY OF APPLE COMPUTER, INC. THE POSSESSOR AGREES TO THE FOLLOWING

I TO MAINTAIN THE DOCUMENT IN CONFIDENCE

II NOT TO REPRODUCE OR COPY IT

III NOT TO REVEAL OR PUBLISH IN WHOLE OR PART

APPLE COMPUTER INC.

SIZE	DRAWING NUMBER	REV.
D	051-6790	E

SCALE NONE SHT 69 OF 154

Preliminary

www.laptop-schematics.com

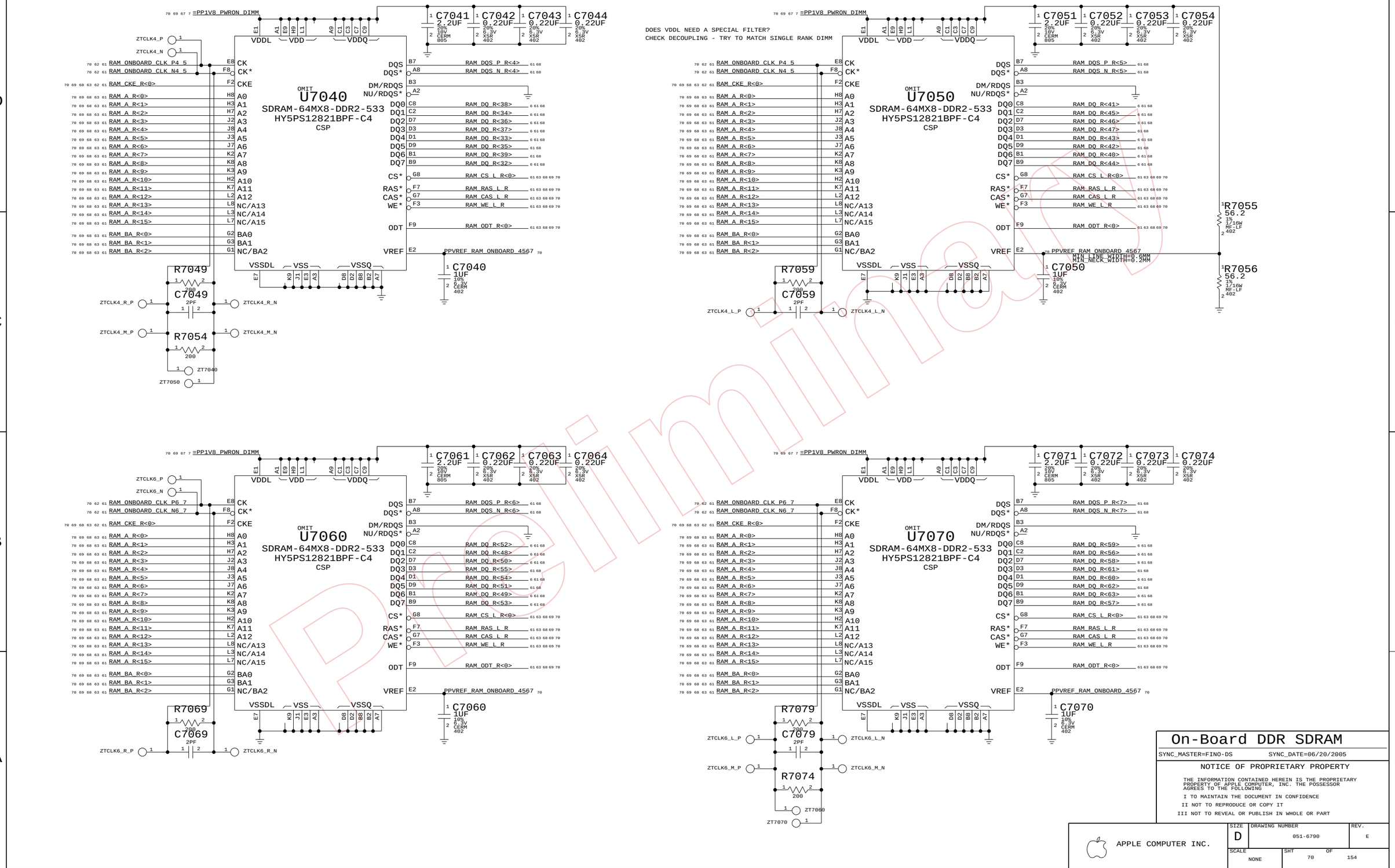

On-Board DDR SDRAM

SYNC_MASTER=FINO-DS SYNC_DATE=06/20/2005

NOTICE OF PROPRIETARY PROPERTY

THE INFORMATION CONTAINED HEREIN IS THE PROPRIETARY PROPERTY OF APPLE COMPUTER, INC. THE POSSESSOR AGREES TO THE FOLLOWING

I TO MAINTAIN THE DOCUMENT IN CONFIDENCE

II NOT TO REPRODUCE OR COPY IT

III NOT TO REVEAL OR PUBLISH IN WHOLE OR PART

APPLE COMPUTER INC.

SIZE	DRAWING NUMBER	REV.
D	051-6790	E
SCALE NONE	SHT 70 OF 154	

Preliminary

www.laptop-schematics.com

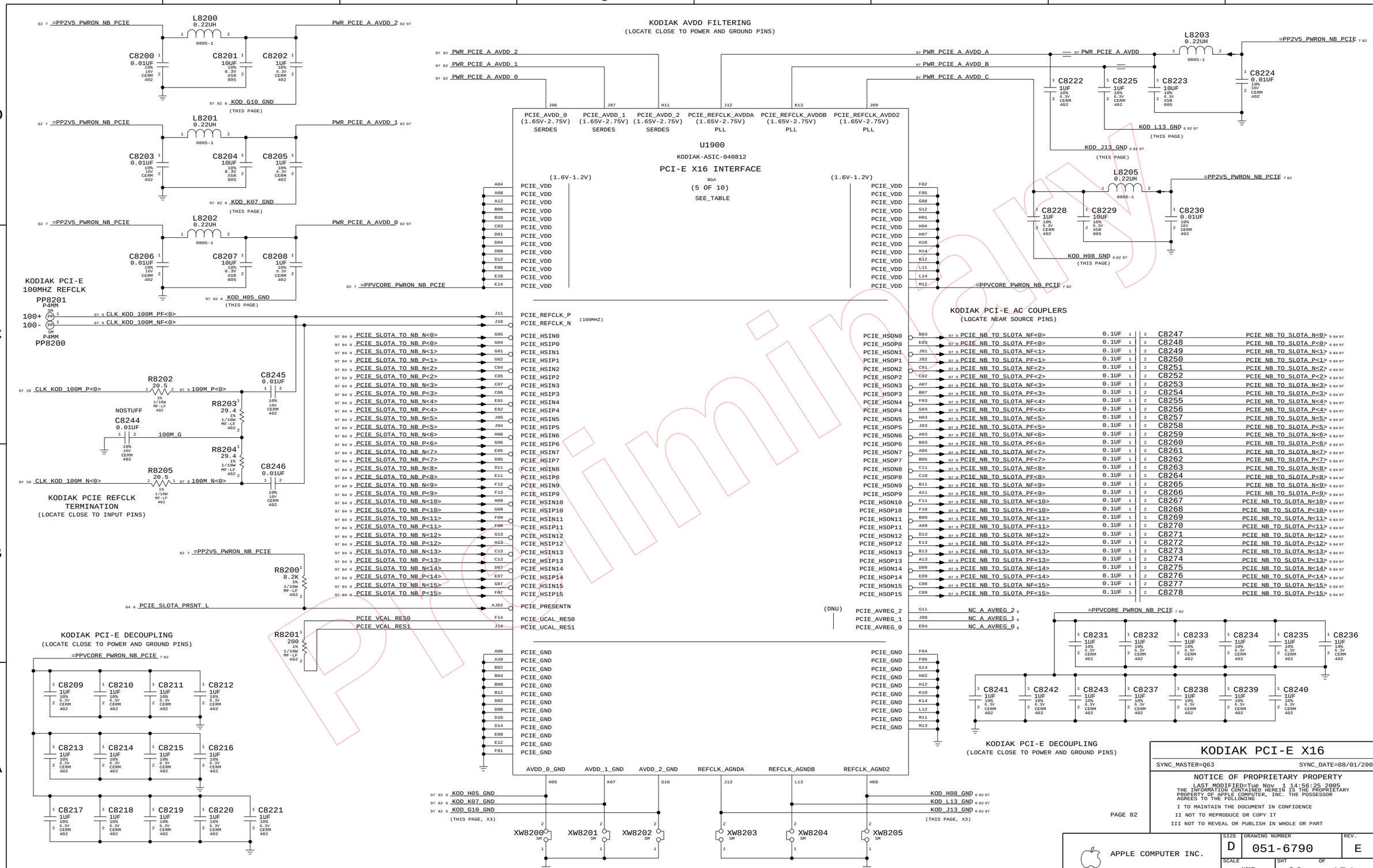

www.laptop-schematics.com

PART#	QTY	DESCRIPTION	REFERENCE DESIGNATOR(S)	BOM OPTION	
338S0239	1	IC,RV370 XT, GRAPHICS CTLR	U8400	RV370XT	CRITICAL
338S0265	1	IC,RV380 XT A23, GRAPHICS CTLR	U8400	RV380XT	CRITICAL

REMOVED COMPLIANCE TEST POINTS
FINO WILL PLACE COUPLING CAPACITORS ON RECEIVING SIDE
(THIS IS ALLOWED FOR CHIP TO CHIP PCIE)
CAP PAD CAN BE USED FOR COMPLIANCE TEST

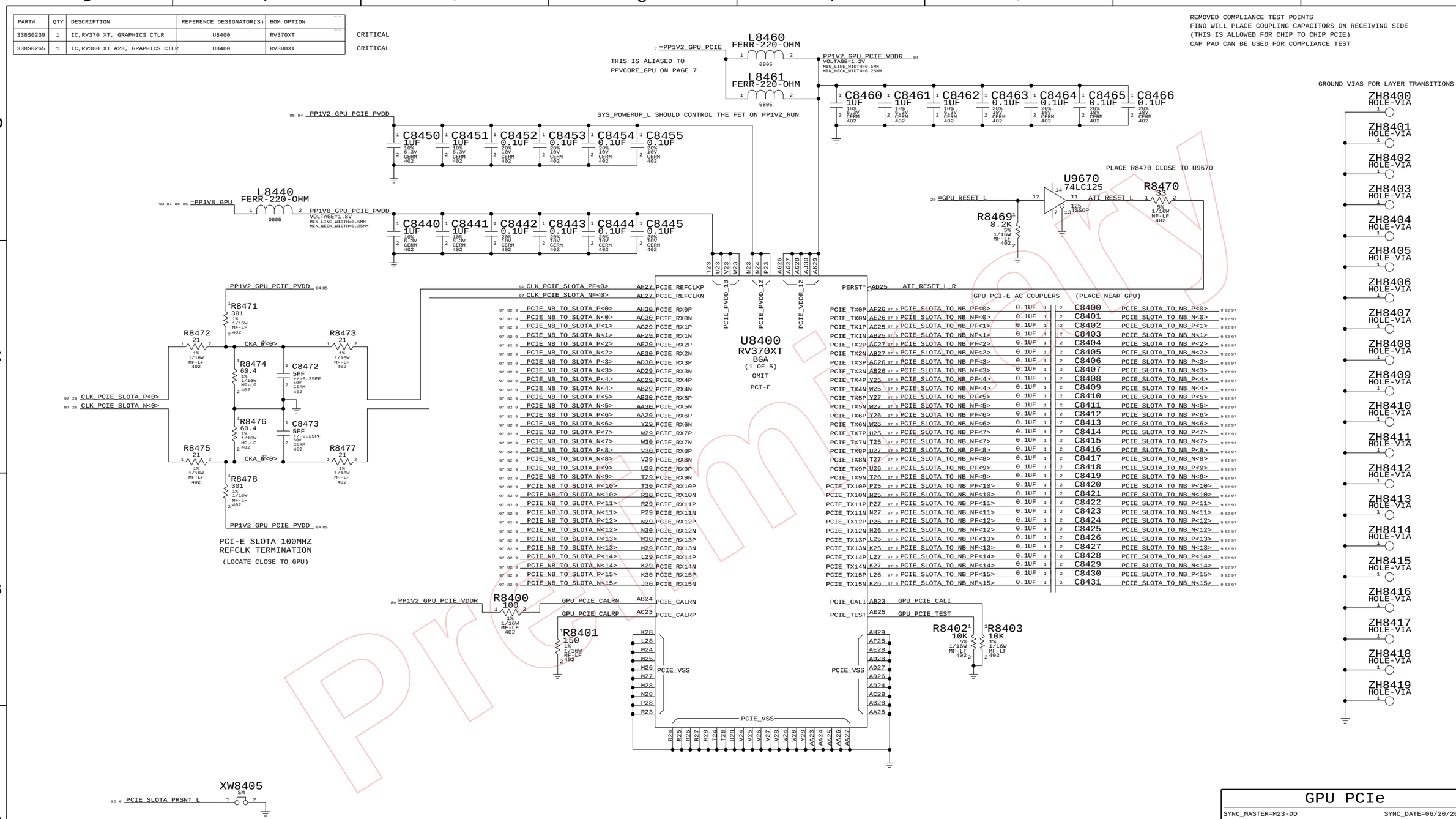

GPU PCIe

SYNC_MASTER=M23-DD SYNC_DATE=06/20/2005

NOTICE OF PROPRIETARY PROPERTY

THE INFORMATION CONTAINED HEREIN IS THE PROPRIETARY PROPERTY OF APPLE COMPUTER, INC. THE POSSESSOR AGREES TO THE FOLLOWING

I TO MAINTAIN THE DOCUMENT IN CONFIDENCE
II NOT TO REPRODUCE OR COPY IT
III NOT TO REVEAL OR PUBLISH IN WHOLE OR PART

APPLE COMPUTER INC.

SIZE	DRAWING NUMBER	REV.
D	051-6790	E
SCALE NONE	SHT 84 OF 154	

Preliminary
www.laptop-schematics.com

GPU VCORE VREG

NOTE:
SET OUTPUT = 1.25V +/- 2% FOR RV370 XT
1.30V +/- 2% FOR RV380 XT

IRU3037ACS VREF = 0.8 VDC
VOUT=VREF*(R8503+R8505)/R8505

M23=1.272V
M33=1.332V

PEAK CURRENT OF PPVCORE_GPU
7.2A WITH RV370 XT
8.3A WITH RV380 XT

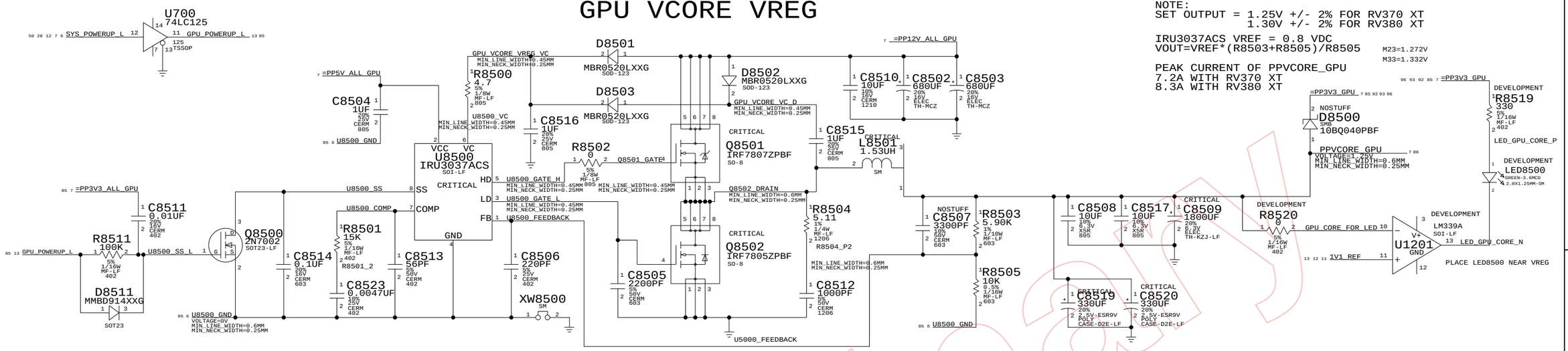

GPU 1.7V VDDC_CT

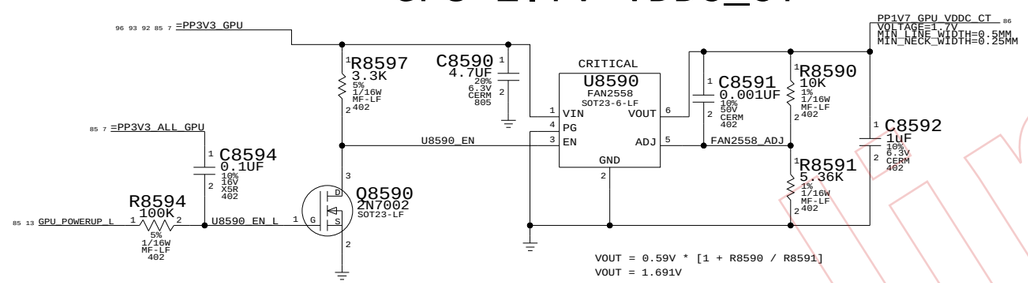

GPU 1.20V PCIE PVDD

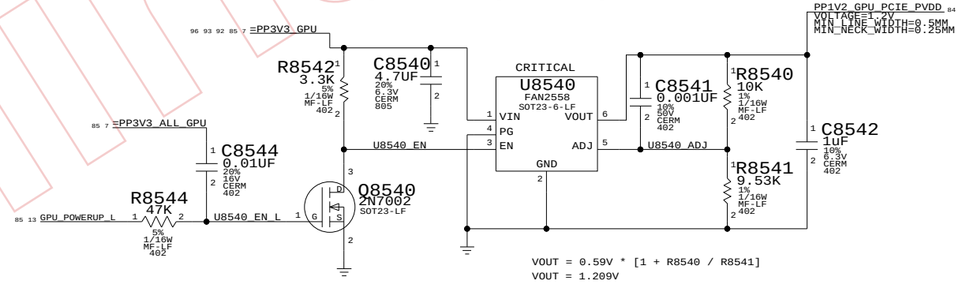

GPU 1.80V TPVDD

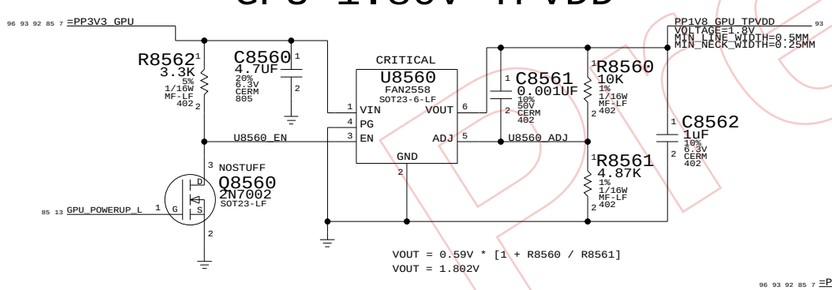

GPU 2.5V A2VDD

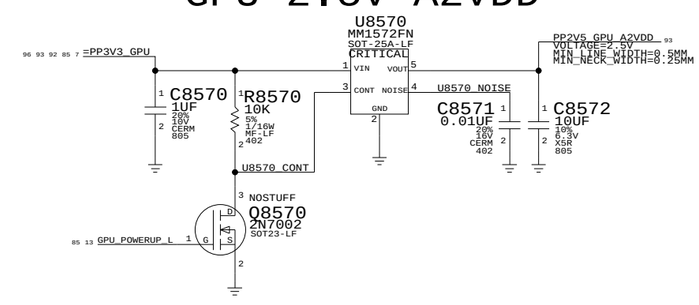

GPU 1.8V VREG

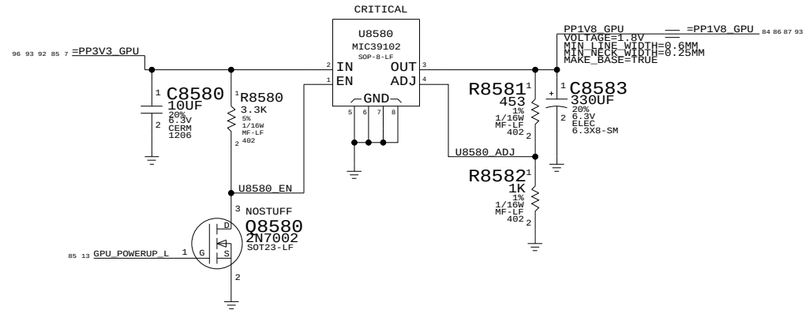

POWER SEQUENCING FOR RV370/80: =PP3V3_GPU > =PPV_GPU_MEM > VDDC_CT > PPVCORE_GPU
PP2V5_GPU_A2VDD > PP1V8_GPU > PCIE_PVDD

THE ENTIRE SEQUENCE SHOULD TAKE LESS THAN 40 MS (T1+T3 IN DATABOOK)
HOWEVER IDEALLY ALL POWER RAILS SHOULD RAMP TOGETHER
POWER DOWN SEQUENCE SHOULD BE IN REVERSE ORDER

Graphics Vregs

SYNC_MASTER=M23-DD SYNC_DATE=06/20/2005

NOTICE OF PROPRIETARY PROPERTY

THE INFORMATION CONTAINED HEREIN IS THE PROPRIETARY PROPERTY OF APPLE COMPUTER, INC. THE POSSESSOR AGREES TO THE FOLLOWING

I TO MAINTAIN THE DOCUMENT IN CONFIDENCE
II NOT TO REPRODUCE OR COPY IT
III NOT TO REVEAL OR PUBLISH IN WHOLE OR PART

APPLE COMPUTER INC.

SIZE	DRAWING NUMBER	REV.
D	051-6790	E
SCALE NONE	SHT 85 OF 154	

Preliminary
www.laptop-schematics.com

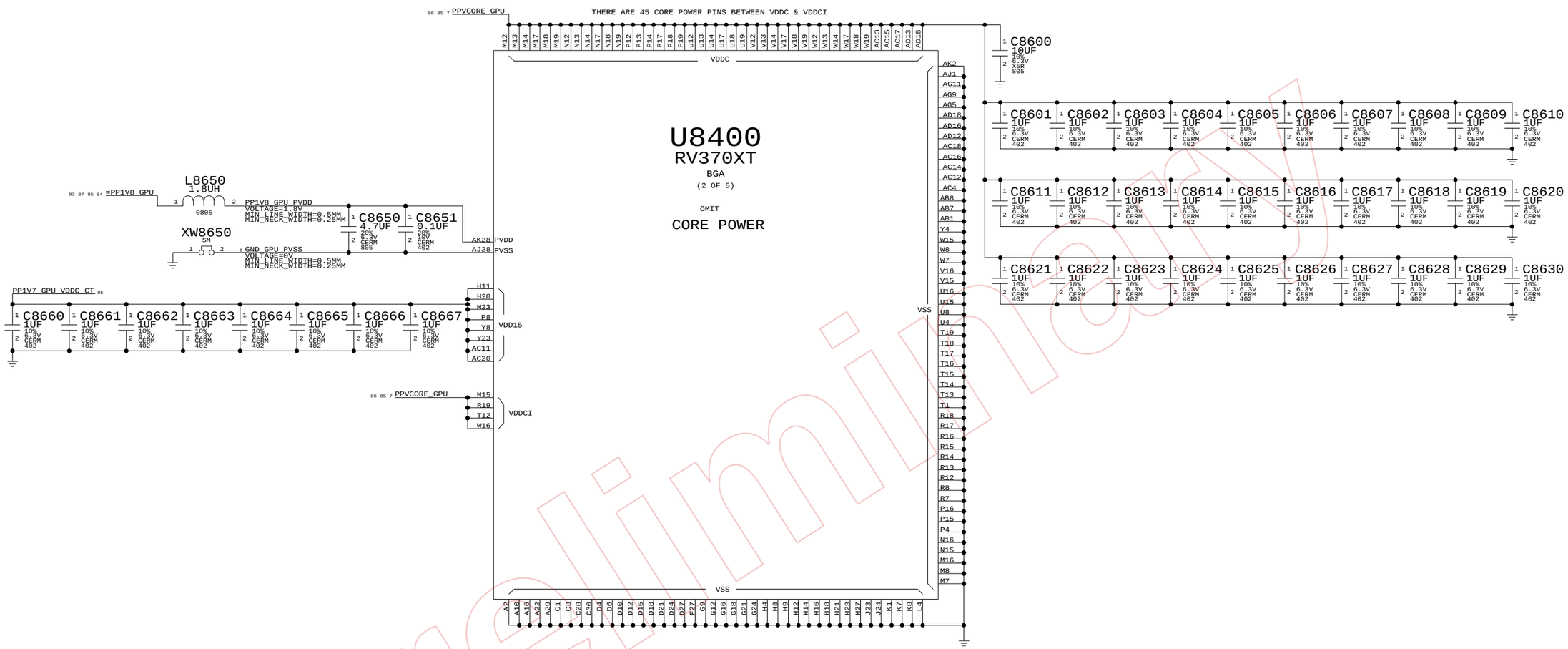

Preliminary

www.laptop-schematics.com

GPU Core Power

SYNC_MASTER=FINO-DD SYNC_DATE=06/20/2005

NOTICE OF PROPRIETARY PROPERTY

THE INFORMATION CONTAINED HEREIN IS THE PROPRIETARY PROPERTY OF APPLE COMPUTER, INC. THE POSSESSOR AGREES TO THE FOLLOWING

I TO MAINTAIN THE DOCUMENT IN CONFIDENCE

II NOT TO REPRODUCE OR COPY IT

III NOT TO REVEAL OR PUBLISH IN WHOLE OR PART

APPLE COMPUTER INC.

SIZE	DRAWING NUMBER	REV.
D	051-6790	E

SCALE NONE SHT 86 OF 154

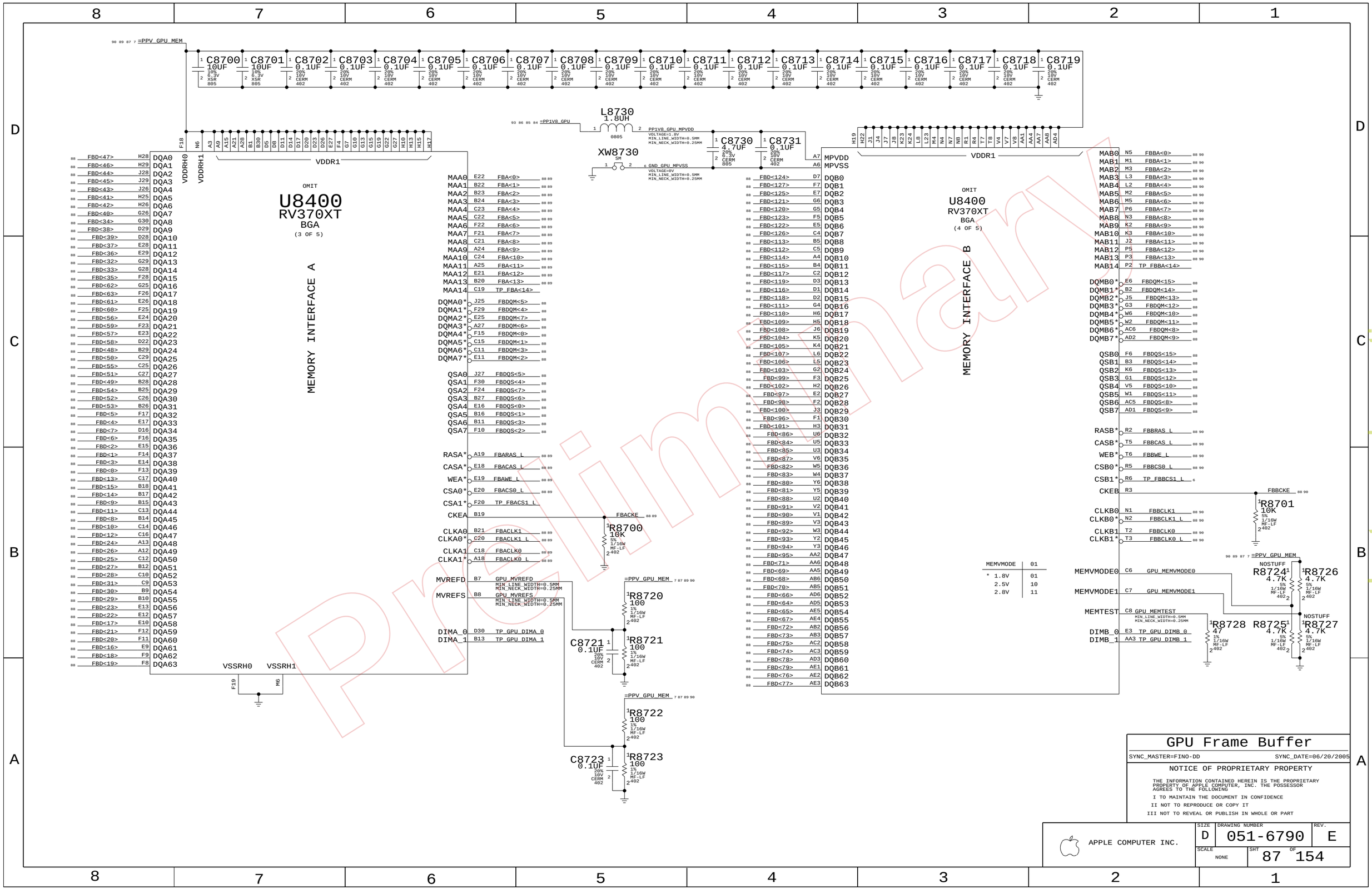
=PPV_GPU_MEM
C8700 10UF 10% 6.3V X5R 805
C8701 10UF 10% 6.3V X5R 805
C8702 0.1UF 20% 10V CERM 402
C8703 0.1UF 20% 10V CERM 402
C8704 0.1UF 20% 10V CERM 402
C8705 0.1UF 20% 10V CERM 402
C8706 0.1UF 20% 10V CERM 402
C8707 0.1UF 20% 10V CERM 402
C8708 0.1UF 20% 10V CERM 402
C8709 0.1UF 20% 10V CERM 402
C8710 0.1UF 20% 10V CERM 402
C8711 0.1UF 20% 10V CERM 402
C8712 0.1UF 20% 10V CERM 402
C8713 0.1UF 20% 10V CERM 402
C8714 0.1UF 20% 10V CERM 402
C8715 0.1UF 20% 10V CERM 402
C8716 0.1UF 20% 10V CERM 402
C8717 0.1UF 20% 10V CERM 402
C8718 0.1UF 20% 10V CERM 402
C8719 0.1UF 20% 10V CERM 402
=PP1V8_GPU
L8730 1.8UH 0805
PP1V8_GPU_MPVDD
VOLTAGE=1.8V
MIN_LINE_WIDTH=0.5MM
MIN_NECK_WIDTH=0.25MM
XW8730 SM
GND_GPU_MPVSS
VOLTAGE=0V
MIN_LINE_WIDTH=0.5MM
MIN_NECK_WIDTH=0.25MM
C8730 4.7UF 20% 6.3V CERM 805
C8731 0.1UF 20% 10V CERM 402
VDDR1
VDDRH0
VDDRH1
OMIT
U8400
RV370XT
BGA
(3 OF 5)
MEMORY INTERFACE A
DQA0 DQA1 DQA2 DQA3 DQA4 DQA5 DQA6 DQA7 DQA8 DQA9 DQA10 DQA11 DQA12 DQA13 DQA14 DQA15 DQA16 DQA17 DQA18 DQA19 DQA20 DQA21 DQA22 DQA23 DQA24 DQA25 DQA26 DQA27 DQA28 DQA29 DQA30 DQA31 DQA32 DQA33 DQA34 DQA35 DQA36 DQA37 DQA38 DQA39 DQA40 DQA41 DQA42 DQA43 DQA44 DQA45 DQA46 DQA47 DQA48 DQA49 DQA50 DQA51 DQA52 DQA53 DQA54 DQA55 DQA56 DQA57 DQA58 DQA59 DQA60 DQA61 DQA62 DQA63
MAA0 MAA1 MAA2 MAA3 MAA4 MAA5 MAA6 MAA7 MAA8 MAA9 MAA10 MAA11 MAA12 MAA13 MAA14
DQMA0* DQMA1* DQMA2* DQMA3* DQMA4* DQMA5* DQMA6* DQMA7*
QSA0 QSA1 QSA2 QSA3 QSA4 QSA5 QSA6 QSA7
RASA* CASA* WEA* CSA0* CSA1* CKEA
CLKA0 CLKA0* CLKA1 CLKA1*
MVREFD MVREFS
DIMA_0 DIMA_1
R8700 10K 5% 1/16W MF-LF 402
R8720 100 1% 1/16W MF-LF 402
R8721 100 1% 1/16W MF-LF 402
C8721 0.1UF 20% 10V CERM 402
R8722 100 1% 1/16W MF-LF 402
R8723 100 1% 1/16W MF-LF 402
C8723 0.1UF 20% 10V CERM 402
VSSRH0 VSSRH1
OMIT
U8400
RV370XT
BGA
(4 OF 5)
MEMORY INTERFACE B
MPVDD MPVSS
DQB0 DQB1 DQB2 DQB3 DQB4 DQB5 DQB6 DQB7 DQB8 DQB9 DQB10 DQB11 DQB12 DQB13 DQB14 DQB15 DQB16 DQB17 DQB18 DQB19 DQB20 DQB21 DQB22 DQB23 DQB24 DQB25 DQB26 DQB27 DQB28 DQB29 DQB30 DQB31 DQB32 DQB33 DQB34 DQB35 DQB36 DQB37 DQB38 DQB39 DQB40 DQB41 DQB42 DQB43 DQB44 DQB45 DQB46 DQB47 DQB48 DQB49 DQB50 DQB51 DQB52 DQB53 DQB54 DQB55 DQB56 DQB57 DQB58 DQB59 DQB60 DQB61 DQB62 DQB63
MAB0 MAB1 MAB2 MAB3 MAB4 MAB5 MAB6 MAB7 MAB8 MAB9 MAB10 MAB11 MAB12 MAB13 MAB14
DQMB0* DQMB1* DQMB2* DQMB3* DQMB4* DQMB5* DQMB6* DQMB7*
QSB0 QSB1 QSB2 QSB3 QSB4 QSB5 QSB6 QSB7
RASB* CASB* WEB* CSB0* CSB1* CKEB
CLKB0 CLKB0* CLKB1 CLKB1*
MEMVMODE0 MEMVMODE1 MEMTEST DIMB_0 DIMB_1
R8701 10K 5% 1/16W MF-LF 402
R8724 4.7K 5% 1/16W MF-LF 402
R8726 4.7K 5% 1/16W MF-LF 402
R8728 47 1% 1/16W MF-LF 402
R8725 4.7K 5% 1/16W MF-LF 402
R8727 4.7K 5% 1/16W MF-LF 402
NOSTUFF
MEMVMODE 01
* 1.8V 01
2.5V 10
2.8V 11
GPU Frame Buffer
SYNC_MASTER=FINO-DD
SYNC_DATE=06/20/2005
NOTICE OF PROPRIETARY PROPERTY
THE INFORMATION CONTAINED HEREIN IS THE PROPRIETARY PROPERTY OF APPLE COMPUTER, INC. THE POSSESSOR AGREES TO THE FOLLOWING
I TO MAINTAIN THE DOCUMENT IN CONFIDENCE
II NOT TO REPRODUCE OR COPY IT
III NOT TO REVEAL OR PUBLISH IN WHOLE OR PART
APPLE COMPUTER INC.
SIZE D
DRAWING NUMBER 051-6790
REV. E
SCALE NONE
SHT 87 OF 154
Preliminary
www.laptop-schematics.com

FRAME BUFFER A TERMINATION

PLACE R'S CLOSE TO MEMORY

FBD<31>	22	3	6	RP8820	RFBD<31>
FBD<30>	22	4	5	RP8820	RFBD<30>
FBD<29>	22	1	8	RP8820	RFBD<29>
FBD<28>	22	2	7	RP8820	RFBD<28>
FBD<27>	22	3	6	RP8821	RFBD<27>
FBD<26>	22	4	5	RP8821	RFBD<26>
FBD<25>	22	2	7	RP8821	RFBD<25>
FBD<24>	22	1	8	RP8821	RFBD<24>
FBD<0>	22	1	8	RP8822	RFBD<0>
FBD<1>	22	2	7	RP8822	RFBD<1>
FBD<2>	22	4	5	RP8822	RFBD<2>
FBD<3>	22	3	6	RP8822	RFBD<3>
FBD<17>	22	1	8	RP8823	RFBD<17>
FBD<16>	22	2	7	RP8823	RFBD<16>
FBD<18>	22	3	6	RP8823	RFBD<18>
FBD<19>	22	4	5	RP8823	RFBD<19>
FBD<15>	22	4	5	RP8824	RFBD<15>
FBD<14>	22	3	6	RP8824	RFBD<14>
FBD<13>	22	2	7	RP8824	RFBD<13>
FBD<12>	22	1	8	RP8824	RFBD<12>
FBD<10>	22	3	6	RP8825	RFBD<10>
FBD<11>	22	4	5	RP8825	RFBD<11>
FBD<9>	22	1	8	RP8825	RFBD<9>
FBD<8>	22	2	7	RP8825	RFBD<8>
FBD<5>	22	2	7	RP8826	RFBD<5>
FBD<6>	22	3	6	RP8826	RFBD<6>
FBD<4>	22	1	8	RP8826	RFBD<4>
FBD<7>	22	4	5	RP8826	RFBD<7>
FBD<20>	22	1	8	RP8827	RFBD<20>
FBD<21>	22	2	7	RP8827	RFBD<21>
FBD<22>	22	3	6	RP8827	RFBD<22>
FBD<23>	22	4	5	RP8827	RFBD<23>

FBD<32>	22	3	6	RP8828	RFBD<32>
FBD<33>	22	4	5	RP8828	RFBD<33>
FBD<34>	22	2	7	RP8828	RFBD<34>
FBD<35>	22	1	8	RP8828	RFBD<35>
FBD<36>	22	4	5	RP8816	RFBD<36>
FBD<37>	22	3	6	RP8816	RFBD<37>
FBD<38>	22	2	7	RP8816	RFBD<38>
FBD<39>	22	1	8	RP8816	RFBD<39>
FBD<40>	22	3	6	RP8829	RFBD<40>
FBD<41>	22	4	5	RP8829	RFBD<41>
FBD<42>	22	2	7	RP8829	RFBD<42>
FBD<43>	22	1	8	RP8829	RFBD<43>
FBD<44>	22	4	5	RP8830	RFBD<44>
FBD<45>	22	3	6	RP8830	RFBD<45>
FBD<46>	22	1	8	RP8830	RFBD<46>
FBD<47>	22	2	7	RP8830	RFBD<47>
FBD<48>	22	4	5	RP8831	RFBD<48>
FBD<49>	22	2	7	RP8831	RFBD<49>
FBD<50>	22	3	6	RP8831	RFBD<50>
FBD<51>	22	1	8	RP8831	RFBD<51>
FBD<52>	22	3	6	RP8800	RFBD<52>
FBD<53>	22	4	5	RP8800	RFBD<53>
FBD<54>	22	2	7	RP8800	RFBD<54>
FBD<55>	22	1	8	RP8800	RFBD<55>
FBD<56>	22	4	5	RP8801	RFBD<56>
FBD<57>	22	3	6	RP8801	RFBD<57>
FBD<58>	22	1	8	RP8801	RFBD<58>
FBD<59>	22	2	7	RP8801	RFBD<59>
FBD<60>	22	4	5	RP8802	RFBD<60>
FBD<61>	22	2	7	RP8802	RFBD<61>
FBD<62>	22	3	6	RP8802	RFBD<62>
FBD<63>	22	1	8	RP8802	RFBD<63>

FBDQS<0>	22	1	2	R8800	RFBDQS<0>
FBDQS<1>	22	1	2	R8801	RFBDQS<1>
FBDQS<2>	22	1	2	R8802	RFBDQS<2>
FBDQS<3>	22	1	2	R8803	RFBDQS<3>
FBDQS<4>	22	1	2	R8804	RFBDQS<4>
FBDQS<5>	22	1	2	R8805	RFBDQS<5>
FBDQS<6>	22	1	2	R8806	RFBDQS<6>
FBDQS<7>	22	1	2	R8807	RFBDQS<7>

FBDQM<0>	22	1	2	R8830	RFBDQM<0>
FBDQM<1>	22	1	2	R8831	RFBDQM<1>
FBDQM<2>	22	1	2	R8832	RFBDQM<2>
FBDQM<3>	22	1	2	R8833	RFBDQM<3>
FBDQM<4>	22	1	2	R8834	RFBDQM<4>
FBDQM<5>	22	1	2	R8835	RFBDQM<5>
FBDQM<6>	22	1	2	R8836	RFBDQM<6>
FBDQM<7>	22	1	2	R8837	RFBDQM<7>

PLACE CLOCK TERMINATION AFTER MEMORY
GPU -> MEMORY -> TERMINATION

FBACLK0
R8820 56.2 1% 1/16W MF-LF 402
FBACLK0_TERM
MIN_LINE_WIDTH=0.5MM
MIN_NECK_WIDTH=0.25MM
R8821 56.2 1% 1/16W MF-LF 402
C8821 0.01UF 20% 16V CERM 402
FBACLK0_L

FBACLK1
R8822 56.2 1% 1/16W MF-LF 402
FBACLK1_TERM
MIN_LINE_WIDTH=0.5MM
MIN_NECK_WIDTH=0.25MM
R8823 56.2 1% 1/16W MF-LF 402
C8823 0.01UF 20% 16V CERM 402
FBACLK1_L

FRAME BUFFER B TERMINATION

FBD<64>	22	1	8	RP8810	RFBD<64>
FBD<65>	22	4	5	RP8810	RFBD<65>
FBD<66>	22	2	7	RP8810	RFBD<66>
FBD<67>	22	3	6	RP8810	RFBD<67>
FBD<84>	22	1	8	RP8809	RFBD<84>
FBD<85>	22	2	7	RP8809	RFBD<85>
FBD<86>	22	3	6	RP8809	RFBD<86>
FBD<87>	22	4	5	RP8809	RFBD<87>
FBD<72>	22	2	7	RP8819	RFBD<72>
FBD<73>	22	1	8	RP8819	RFBD<73>
FBD<75>	22	4	5	RP8819	RFBD<75>
FBD<74>	22	3	6	RP8819	RFBD<74>
FBD<68>	22	1	8	RP8808	RFBD<68>
FBD<70>	22	2	7	RP8808	RFBD<70>
FBD<69>	22	3	6	RP8808	RFBD<69>
FBD<71>	22	4	5	RP8808	RFBD<71>
FBD<80>	22	1	8	RP8807	RFBD<80>
FBD<81>	22	2	7	RP8807	RFBD<81>
FBD<82>	22	3	6	RP8807	RFBD<82>
FBD<83>	22	4	5	RP8807	RFBD<83>
FBD<76>	22	2	7	RP8817	RFBD<76>
FBD<77>	22	1	8	RP8817	RFBD<77>
FBD<78>	22	4	5	RP8817	RFBD<78>
FBD<79>	22	3	6	RP8817	RFBD<79>
FBD<91>	22	3	6	RP8818	RFBD<91>
FBD<90>	22	4	5	RP8818	RFBD<90>
FBD<89>	22	1	8	RP8818	RFBD<89>
FBD<88>	22	2	7	RP8818	RFBD<88>
FBD<95>	22	3	6	RP8803	RFBD<95>
FBD<94>	22	4	5	RP8803	RFBD<94>
FBD<93>	22	1	8	RP8803	RFBD<93>
FBD<92>	22	2	7	RP8803	RFBD<92>

FBD<96>	22	4	5	RP8815	RFBD<96>
FBD<97>	22	3	6	RP8815	RFBD<97>
FBD<98>	22	2	7	RP8815	RFBD<98>
FBD<99>	22	1	8	RP8815	RFBD<99>
FBD<100>	22	4	5	RP8814	RFBD<100>
FBD<101>	22	3	6	RP8814	RFBD<101>
FBD<102>	22	2	7	RP8814	RFBD<102>
FBD<103>	22	1	8	RP8814	RFBD<103>
FBD<104>	22	4	5	RP8812	RFBD<104>
FBD<105>	22	3	6	RP8812	RFBD<105>
FBD<106>	22	2	7	RP8812	RFBD<106>
FBD<107>	22	1	8	RP8812	RFBD<107>
FBD<108>	22	4	5	RP8813	RFBD<108>
FBD<109>	22	3	6	RP8813	RFBD<109>
FBD<110>	22	2	7	RP8813	RFBD<110>
FBD<111>	22	1	8	RP8813	RFBD<111>
FBD<112>	22	3	6	RP8811	RFBD<112>
FBD<113>	22	4	5	RP8811	RFBD<113>
FBD<114>	22	2	7	RP8811	RFBD<114>
FBD<115>	22	1	8	RP8811	RFBD<115>
FBD<116>	22	3	6	RP8806	RFBD<116>
FBD<117>	22	4	5	RP8806	RFBD<117>
FBD<118>	22	2	7	RP8806	RFBD<118>
FBD<119>	22	1	8	RP8806	RFBD<119>
FBD<120>	22	3	6	RP8804	RFBD<120>
FBD<121>	22	4	5	RP8804	RFBD<121>
FBD<122>	22	2	7	RP8804	RFBD<122>
FBD<123>	22	1	8	RP8804	RFBD<123>
FBD<124>	22	4	5	RP8805	RFBD<124>
FBD<125>	22	2	7	RP8805	RFBD<125>
FBD<126>	22	3	6	RP8805	RFBD<126>
FBD<127>	22	1	8	RP8805	RFBD<127>

FBDQS<8>	22	1	2	R8808	RFBDQS<8>
FBDQS<9>	22	1	2	R8809	RFBDQS<9>
FBDQS<10>	22	1	2	R8810	RFBDQS<10>
FBDQS<11>	22	1	2	R8811	RFBDQS<11>
FBDQS<12>	22	1	2	R8812	RFBDQS<12>
FBDQS<13>	22	1	2	R8813	RFBDQS<13>
FBDQS<14>	22	1	2	R8814	RFBDQS<14>
FBDQS<15>	22	1	2	R8815	RFBDQS<15>

FBDQM<8>	22	1	2	R8838	RFBDQM<8>
FBDQM<9>	22	1	2	R8839	RFBDQM<9>
FBDQM<10>	22	1	2	R8840	RFBDQM<10>
FBDQM<11>	22	1	2	R8841	RFBDQM<11>
FBDQM<12>	22	1	2	R8842	RFBDQM<12>
FBDQM<13>	22	1	2	R8843	RFBDQM<13>
FBDQM<14>	22	1	2	R8844	RFBDQM<14>
FBDQM<15>	22	1	2	R8845	RFBDQM<15>

FBBCLK0
R8824 56.2 1% 1/16W MF-LF 402
FBBCLK0_TERM
MIN_LINE_WIDTH=0.5MM
MIN_NECK_WIDTH=0.25MM
R8825 56.2 1% 1/16W MF-LF 402
C8825 0.01UF 20% 16V CERM 402
FBBCLK0_L

FBBCLK1
R8826 56.2 1% 1/16W MF-LF 402
FBBCLK1_TERM
MIN_LINE_WIDTH=0.5MM
MIN_NECK_WIDTH=0.25MM
R8827 56.2 1% 1/16W MF-LF 402
C8827 0.01UF 20% 16V CERM 402
FBBCLK1_L

	ELECTRICAL_CONSTRAINT_SET	NET_PHYSICAL_TYPE	NET_SPACING_TYPE	DIFFERENTIAL_PAIR	
FBD<127..0>		GPU_FB	GPU_FB		4423
RFBD<127..0>		GPU_FB	GPU_FB		4425
FBA<13..0>		GPU_FB	GPU_FB		4426
FBBA<13..0>		GPU_FB	GPU_FB		4427
FBDQM<15..0>		GPU_FB	GPU_FB		4428
FBDQS<15..0>		GPU_FB	GPU_FBDQS		4429
FBARAS_L		GPU_FB	GPU_FB		4430
FBACAS_L		GPU_FB	GPU_FB		4431
FBAWE_L		GPU_FB	GPU_FB		4441
FBACS0_L		GPU_FB	GPU_FB		4442
FBACKE		GPU_FB	GPU_FB		4443
FBBRAS_L		GPU_FB	GPU_FB		4444
FBBCAS_L		GPU_FB	GPU_FB		4445
FBBWE_L		GPU_FB	GPU_FB		4446
FBBCS0_L		GPU_FB	GPU_FB		4447
FBBCKE		GPU_FB	GPU_FB		4448

	ELECTRICAL_CONSTRAINT_SET	NET_PHYSICAL_TYPE	NET_SPACING_TYPE	DIFFERENTIAL_PAIR	
FBACLK0		GPU_FBCLK	GPU_FBCLK	FBACLK0	4483
FBACLK0_L		GPU_FBCLK	GPU_FBCLK	FBACLK0	4484
FBACLK1		GPU_FBCLK	GPU_FBCLK	FBACLK1	4485
FBACLK1_L		GPU_FBCLK	GPU_FBCLK	FBACLK1	4486
FBBCLK0		GPU_FBCLK	GPU_FBCLK	FBBCLK0	4491
FBBCLK0_L		GPU_FBCLK	GPU_FBCLK	FBBCLK0	4487
FBBCLK1		GPU_FBCLK	GPU_FBCLK	FBBCLK1	4488
FBBCLK1_L		GPU_FBCLK	GPU_FBCLK	FBBCLK1	4492

FB Series Termination

SYNC_MASTER=FINO-DD SYNC_DATE=06/20/2005

NOTICE OF PROPRIETARY PROPERTY

THE INFORMATION CONTAINED HEREIN IS THE PROPRIETARY PROPERTY OF APPLE COMPUTER, INC. THE POSSESSOR AGREES TO THE FOLLOWING

I TO MAINTAIN THE DOCUMENT IN CONFIDENCE

II NOT TO REPRODUCE OR COPY IT

III NOT TO REVEAL OR PUBLISH IN WHOLE OR PART

APPLE COMPUTER INC.

SIZE	DRAWING NUMBER	REV.
D	051-6790	E
SCALE NONE	SHT 88 OF 154	

www.laptop-schematics.com

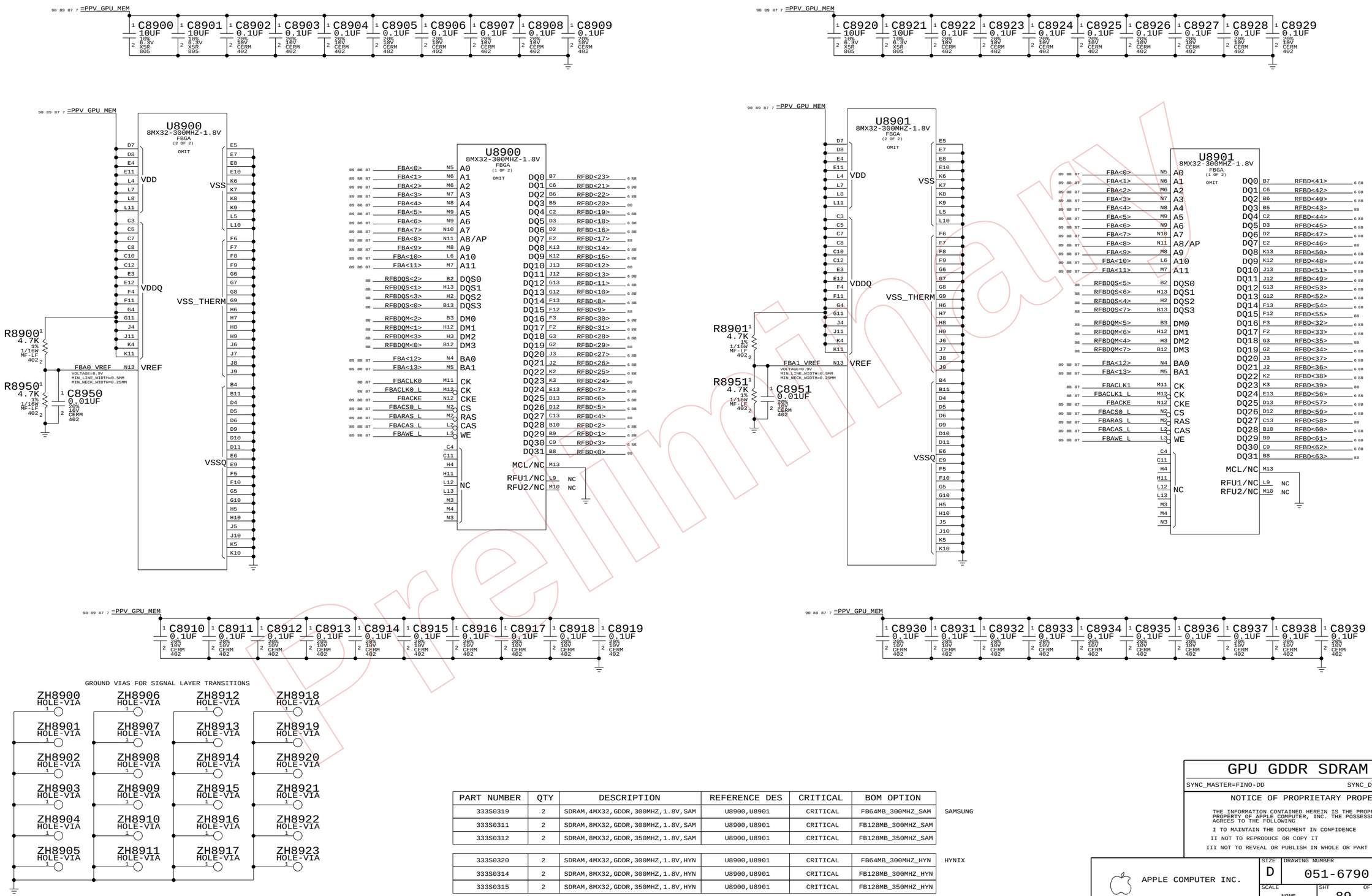

PART NUMBER	QTY	DESCRIPTION	REFERENCE DES	CRITICAL	BOM OPTION	
333S0319	2	SDRAM,4MX32,GDDR,300MHZ,1.8V,SAM	U8900,U8901	CRITICAL	FB64MB_300MHZ_SAM	SAMSUNG
333S0311	2	SDRAM,8MX32,GDDR,300MHZ,1.8V,SAM	U8900,U8901	CRITICAL	FB128MB_300MHZ_SAM	
333S0312	2	SDRAM,8MX32,GDDR,350MHZ,1.8V,SAM	U8900,U8901	CRITICAL	FB128MB_350MHZ_SAM	
333S0320	2	SDRAM,4MX32,GDDR,300MHZ,1.8V,HYN	U8900,U8901	CRITICAL	FB64MB_300MHZ_HYN	HYNIX
333S0314	2	SDRAM,8MX32,GDDR,300MHZ,1.8V,HYN	U8900,U8901	CRITICAL	FB128MB_300MHZ_HYN	
333S0315	2	SDRAM,8MX32,GDDR,350MHZ,1.8V,HYN	U8900,U8901	CRITICAL	FB128MB_350MHZ_HYN	

GPU GDDR SDRAM A

SYNC_MASTER=FINO-DD SYNC_DATE=06/20/2005

NOTICE OF PROPRIETARY PROPERTY

THE INFORMATION CONTAINED HEREIN IS THE PROPRIETARY PROPERTY OF APPLE COMPUTER, INC. THE POSSESSOR AGREES TO THE FOLLOWING

I TO MAINTAIN THE DOCUMENT IN CONFIDENCE

II NOT TO REPRODUCE OR COPY IT

III NOT TO REVEAL OR PUBLISH IN WHOLE OR PART

APPLE COMPUTER INC.

SIZE	DRAWING NUMBER	REV.
D	051-6790	E

SCALE NONE SHT 89 OF 154

Preliminary

www.laptop-schematics.com

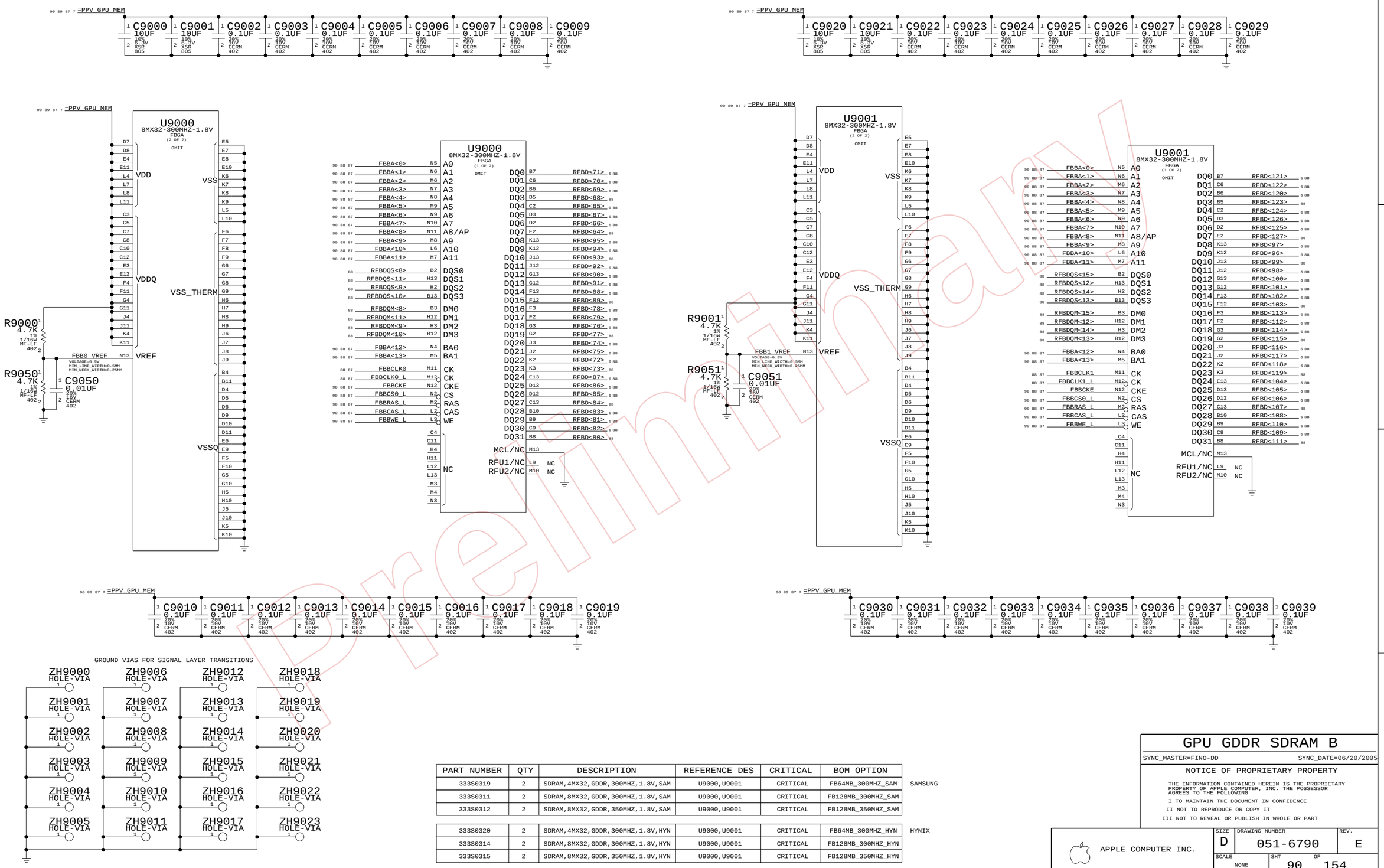

PART NUMBER	QTY	DESCRIPTION	REFERENCE DES	CRITICAL	BOM OPTION	
333S0319	2	SDRAM,4MX32,GDDR,300MHZ,1.8V,SAM	U9000,U9001	CRITICAL	FB64MB_300MHZ_SAM	SAMSUNG
333S0311	2	SDRAM,8MX32,GDDR,300MHZ,1.8V,SAM	U9000,U9001	CRITICAL	FB128MB_300MHZ_SAM	
333S0312	2	SDRAM,8MX32,GDDR,350MHZ,1.8V,SAM	U9000,U9001	CRITICAL	FB128MB_350MHZ_SAM	
333S0320	2	SDRAM,4MX32,GDDR,300MHZ,1.8V,HYN	U9000,U9001	CRITICAL	FB64MB_300MHZ_HYN	HYNIX
333S0314	2	SDRAM,8MX32,GDDR,300MHZ,1.8V,HYN	U9000,U9001	CRITICAL	FB128MB_300MHZ_HYN	
333S0315	2	SDRAM,8MX32,GDDR,350MHZ,1.8V,HYN	U9000,U9001	CRITICAL	FB128MB_350MHZ_HYN	

GPU GDDR SDRAM B

SYNC_MASTER=FINO-DD SYNC_DATE=06/20/2005

NOTICE OF PROPRIETARY PROPERTY

THE INFORMATION CONTAINED HEREIN IS THE PROPRIETARY PROPERTY OF APPLE COMPUTER, INC. THE POSSESSOR AGREES TO THE FOLLOWING

I TO MAINTAIN THE DOCUMENT IN CONFIDENCE

II NOT TO REPRODUCE OR COPY IT

III NOT TO REVEAL OR PUBLISH IN WHOLE OR PART

APPLE COMPUTER INC.

SIZE	DRAWING NUMBER	REV.
D	051-6790	E
SCALE NONE	SHT 90 OF 154	

Preliminary

www.laptop-schematics.com

ATI STRAPS

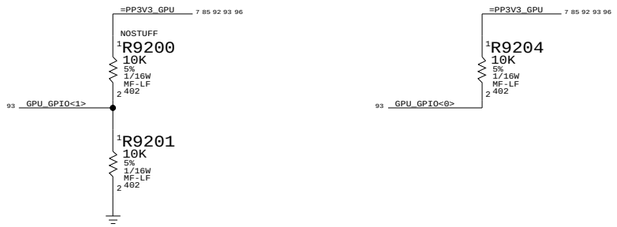

GPIO<1> TRANSMITTER DE-EMPHASIS (ACTIVE LOW)

GPIO<0> TRANSMITTER POWER SAVINGS
(FEATURE DOES NOT WORK - PULLED HIGH TO DISABLE)

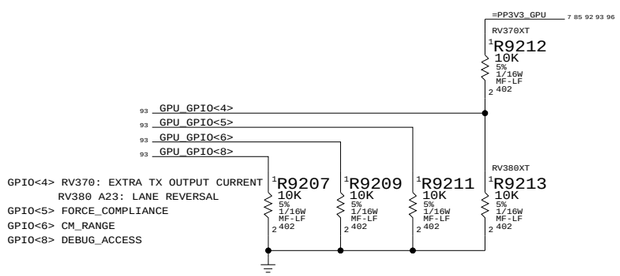

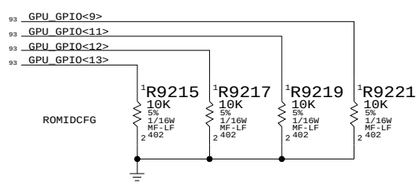

MEMORY STRAPS

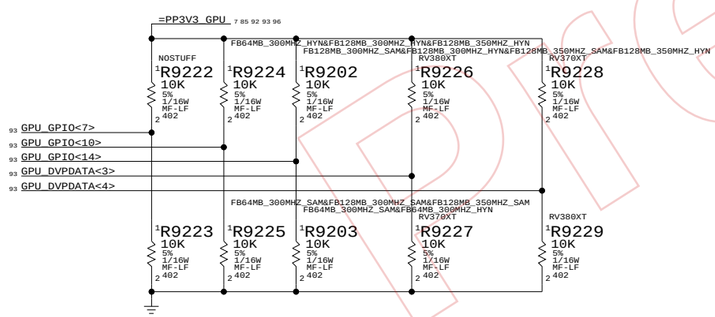

GPIO<7> - MEMORY DIE REVISION
  0 - ORIGINAL DIE REVISION
  1 - NEW (FUTURE) DIE REV
GPIO<10> - MEMORY VENDOR
  0 - SAMSUNG
  1 - HYNIX
GPIO<14> - MEMORY DENSITY
  0 - 4MX32
  1 - 8MX32
DVPDATA<3,4> - SPEED
  00 - 325E / 200M
  01 - 400E / 300M
  10 - 500E / 350M
  11 - RESERVED FOR FUTURE USE

APPLE GPIOS

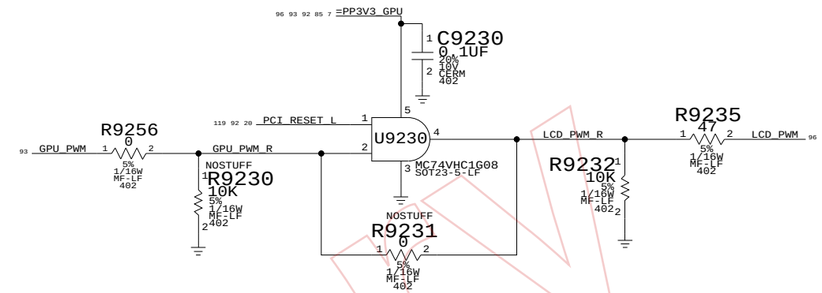

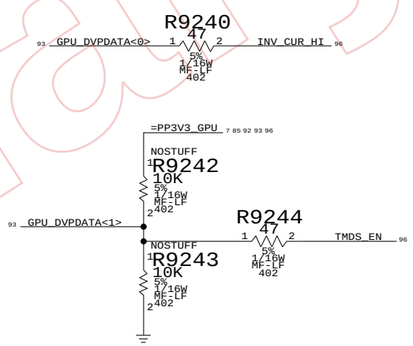

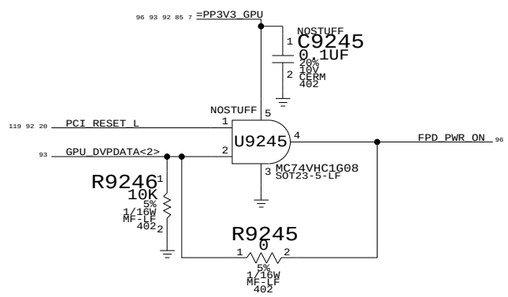

GPU Straps	
SYNC_MASTER=FINO-DD	SYNC_DATE=06/20/2005

NOTICE OF PROPRIETARY PROPERTY

THE INFORMATION CONTAINED HEREIN IS THE PROPRIETARY PROPERTY OF APPLE COMPUTER, INC. THE POSSESSOR AGREES TO THE FOLLOWING

I TO MAINTAIN THE DOCUMENT IN CONFIDENCE
II NOT TO REPRODUCE OR COPY IT
III NOT TO REVEAL OR PUBLISH IN WHOLE OR PART

APPLE COMPUTER INC.

SIZE	DRAWING NUMBER	REV.
D	051-6790	E
SCALE NONE	SHT 92 OF 154	

Preliminary

www.laptop-schematics.com

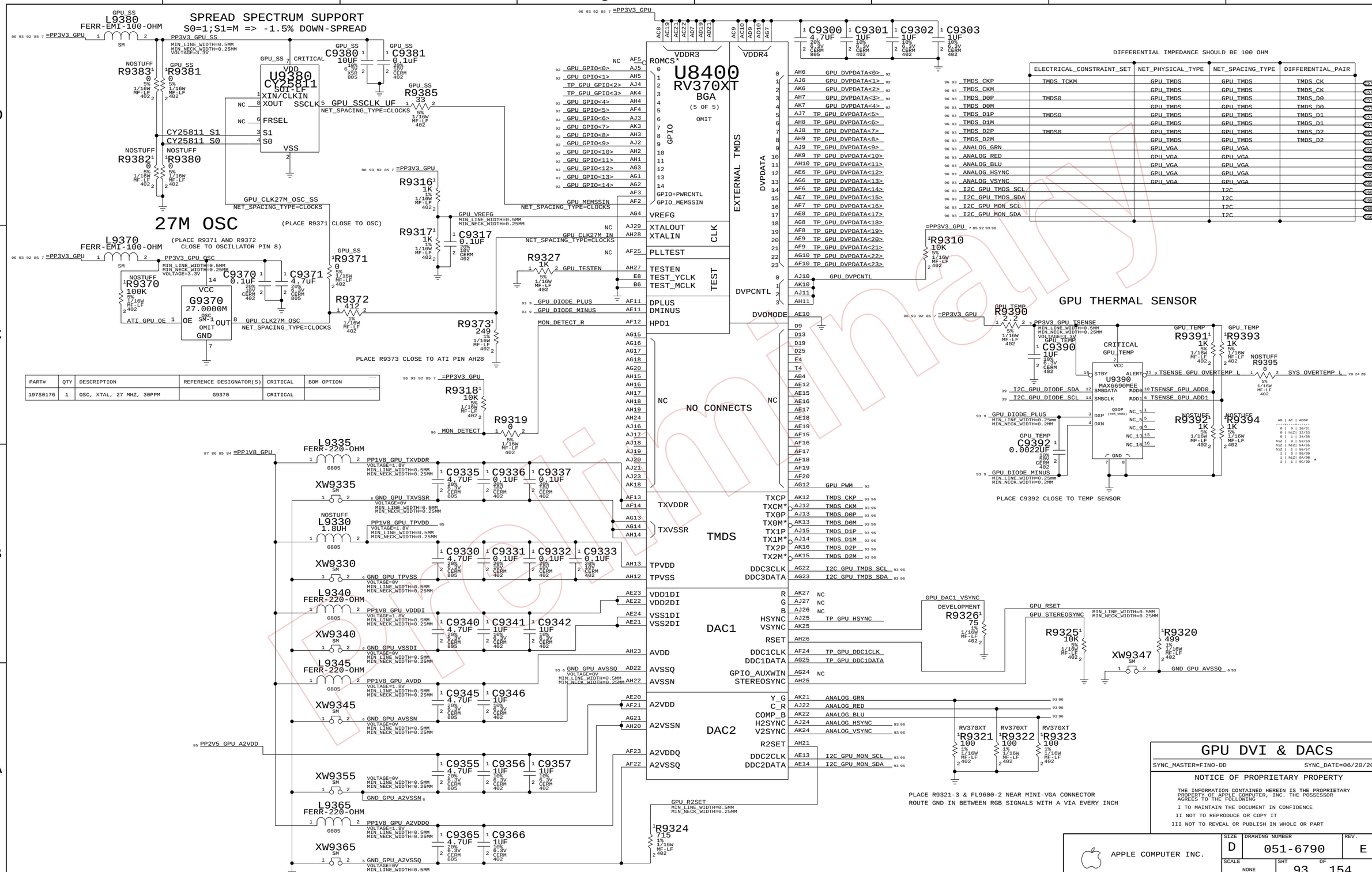

PART#	QTY	DESCRIPTION	REFERENCE DESIGNATOR(S)	CRITICAL	BOM OPTION
197S0176	1	OSC, XTAL, 27 MHZ, 30PPM	G9370	CRITICAL	

Preliminary
www.laptop-schematics.com

INTERNAL LCD

	NET_PHYSICAL_TYPE	NET_SPACING_TYPE	DIFFERENTIAL_PAIR
TCKP	GPU_TMDS	GPU_TMDS	TCK
TCKM	GPU_TMDS	GPU_TMDS	TCK
TD0P	GPU_TMDS	GPU_TMDS	TD0
TD0M	GPU_TMDS	GPU_TMDS	TD0
TD1P	GPU_TMDS	GPU_TMDS	TD1
TD1M	GPU_TMDS	GPU_TMDS	TD1
TD2P	GPU_TMDS	GPU_TMDS	TD2
TD2M	GPU_TMDS	GPU_TMDS	TD2

PLACE R9600-R9604, C9600 AS CLOSE TO GPU AS POSSIBLE

PLACE FILTER CLOSE TO TMDS CONNECTOR

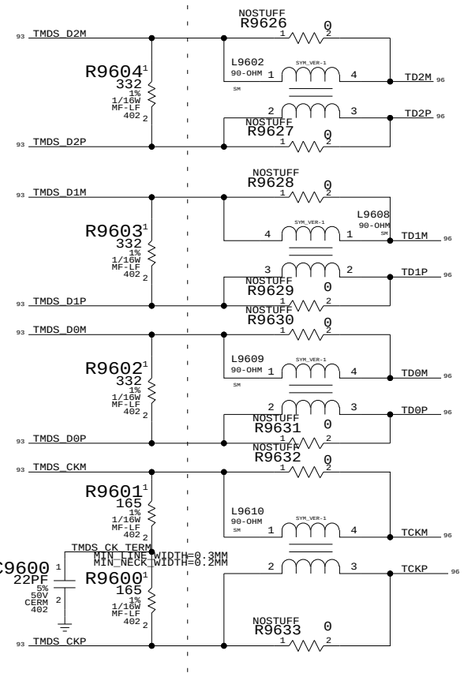

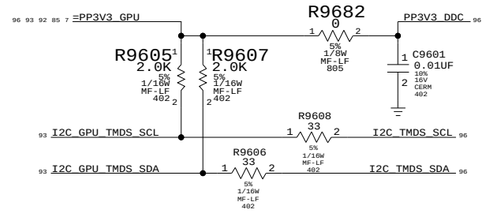

INTERNAL TMDS CONNECTOR

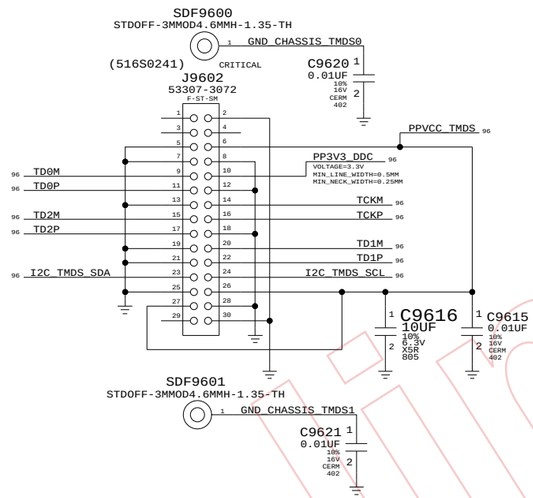

PANEL POWER SEQUENCING

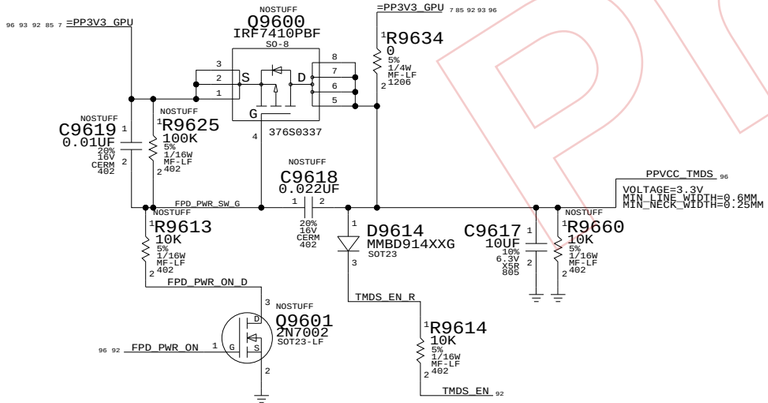

INVERTER INTERFACE

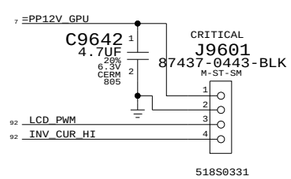

EXTERNAL VGA CONNECTOR

	NET_PHYSICAL_TYPE	NET_SPACING_TYPE
FILT_ANALOG_GRN	GPU_VGA	GPU_VGA
ANALOG_GRN_LC	GPU_VGA	GPU_VGA
ANALOG_GRN_LCL	GPU_VGA	GPU_VGA
FILT_ANALOG_RED	GPU_VGA	GPU_VGA
ANALOG_RED_LC	GPU_VGA	GPU_VGA
ANALOG_RED_LCL	GPU_VGA	GPU_VGA
FILT_ANALOG_BLU	GPU_VGA	GPU_VGA
ANALOG_BLU_LC	GPU_VGA	GPU_VGA
ANALOG_BLU_LCL	GPU_VGA	GPU_VGA
VGA_VSYNC	GPU_VGA	GPU_VGA
VGA_VSYNC_R	GPU_VGA	GPU_VGA
VGA_HSYNC	GPU_VGA	GPU_VGA
VGA_HSYNC_R	GPU_VGA	GPU_VGA

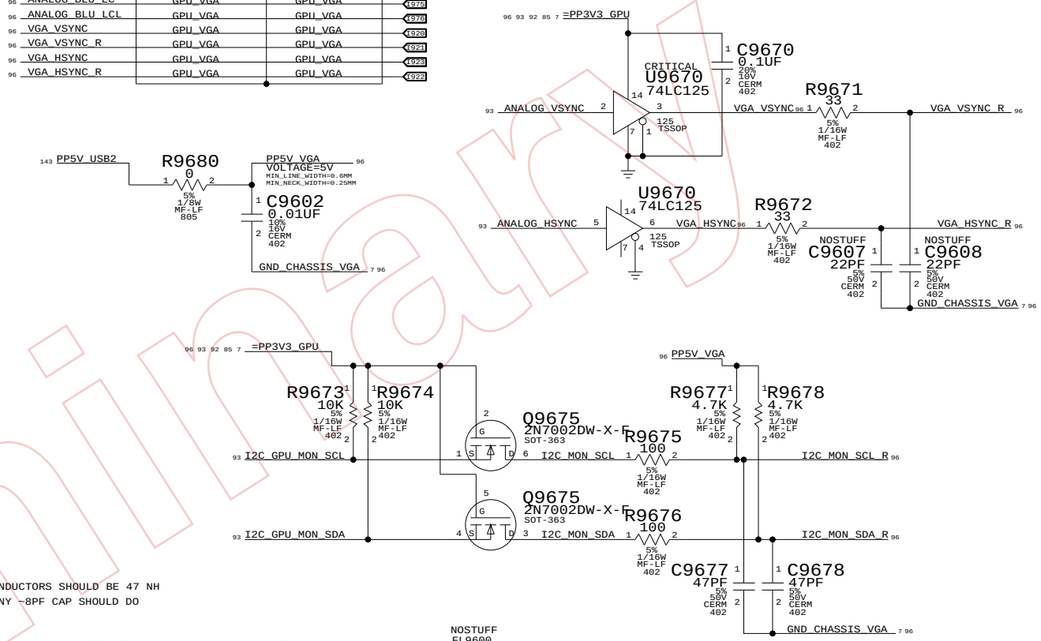

INDUCTORS SHOULD BE 47 NH
ANY ~8PF CAP SHOULD DO

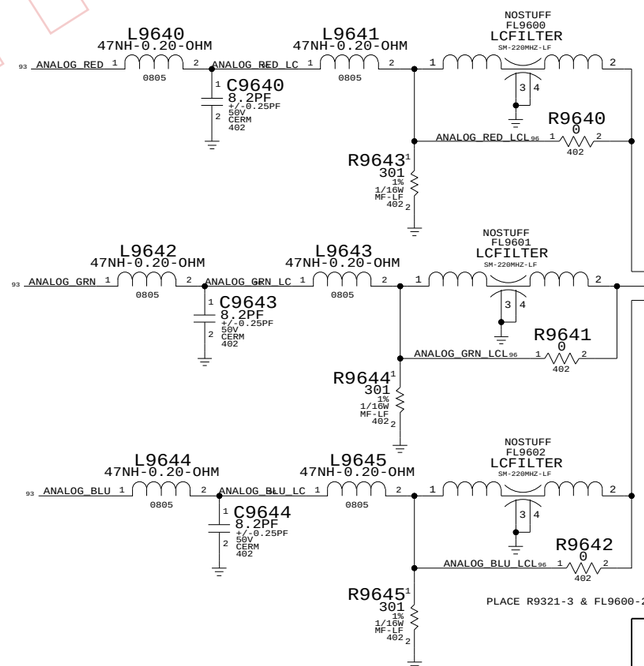

PLACE R9321-3 & FL9600-2 CLOSE TO J9603

M23: 514S0089

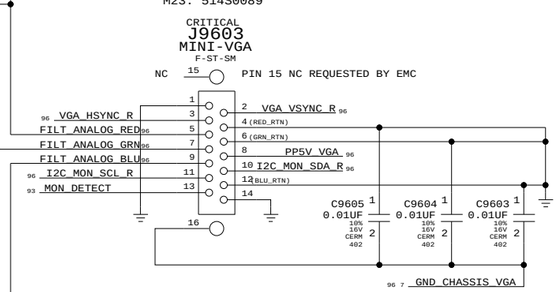

TMDS/Inverter/ExtVGA

SYNC_MASTER=M23-DD SYNC_DATE=06/20/2005

NOTICE OF PROPRIETARY PROPERTY

THE INFORMATION CONTAINED HEREIN IS THE PROPRIETARY PROPERTY OF APPLE COMPUTER, INC. THE POSSESSOR AGREES TO THE FOLLOWING

I TO MAINTAIN THE DOCUMENT IN CONFIDENCE

II NOT TO REPRODUCE OR COPY IT

III NOT TO REVEAL OR PUBLISH IN WHOLE OR PART

APPLE COMPUTER INC.

SIZE	DRAWING NUMBER	REV.
D	051-6790	E
SCALE NONE	SHT 96 OF 154	

Preliminary

www.laptop-schematics.com

KODIAK PCI-E PHYSICAL CONSTRAINT TABLE

SIG_NAME	ELECTRICAL_CONSTRAINT_SET	DIFFERENTIAL_PAIR	NET_PHYSICAL_TYPE	NET_SPACING_TYPE
100M N<0>		CLK_100M	PCIE_CLK	PCIE_CLK
100M P<0>		CLK_100M	PCIE_CLK	PCIE_CLK
CLK_KOD_100M_N<0>		CLK_KODPCIE_100M	PCIE_CLK	PCIE_CLK
CLK_KOD_100M_P<0>		CLK_KODPCIE_100M	PCIE_CLK	PCIE_CLK
CLK_KOD_100M_NF<0>		CLK_KODPCIE_100MF	PCIE_CLK	PCIE_CLK
CLK_KOD_100M_PF<0>		CLK_KODPCIE_100MF	PCIE_CLK	PCIE_CLK
PCIE_NB_TO_SLOTA_NF<0>	PCIE_NB2SA0	PCIE_NB_TO_SLOTA_0_F	PCIE_DATA	PCIE_DATA
PCIE_NB_TO_SLOTA_PF<0>	PCIE_NB2SA0	PCIE_NB_TO_SLOTA_0_F	PCIE_DATA	PCIE_DATA
PCIE_NB_TO_SLOTA_NF<1>	PCIE_NB2SA1	PCIE_NB_TO_SLOTA_1_F	PCIE_DATA	PCIE_DATA
PCIE_NB_TO_SLOTA_PF<1>	PCIE_NB2SA1	PCIE_NB_TO_SLOTA_1_F	PCIE_DATA	PCIE_DATA
PCIE_NB_TO_SLOTA_NF<2>	PCIE_NB2SA2	PCIE_NB_TO_SLOTA_2_F	PCIE_DATA	PCIE_DATA
PCIE_NB_TO_SLOTA_PF<2>	PCIE_NB2SA2	PCIE_NB_TO_SLOTA_2_F	PCIE_DATA	PCIE_DATA
PCIE_NB_TO_SLOTA_NF<3>	PCIE_NB2SA3	PCIE_NB_TO_SLOTA_3_F	PCIE_DATA	PCIE_DATA
PCIE_NB_TO_SLOTA_PF<3>	PCIE_NB2SA3	PCIE_NB_TO_SLOTA_3_F	PCIE_DATA	PCIE_DATA
PCIE_NB_TO_SLOTA_NF<4>	PCIE_NB2SA4	PCIE_NB_TO_SLOTA_4_F	PCIE_DATA	PCIE_DATA
PCIE_NB_TO_SLOTA_PF<4>	PCIE_NB2SA4	PCIE_NB_TO_SLOTA_4_F	PCIE_DATA	PCIE_DATA
PCIE_NB_TO_SLOTA_NF<5>	PCIE_NB2SA5	PCIE_NB_TO_SLOTA_5_F	PCIE_DATA	PCIE_DATA
PCIE_NB_TO_SLOTA_PF<5>	PCIE_NB2SA5	PCIE_NB_TO_SLOTA_5_F	PCIE_DATA	PCIE_DATA
PCIE_NB_TO_SLOTA_NF<6>	PCIE_NB2SA6	PCIE_NB_TO_SLOTA_6_F	PCIE_DATA	PCIE_DATA
PCIE_NB_TO_SLOTA_PF<6>	PCIE_NB2SA6	PCIE_NB_TO_SLOTA_6_F	PCIE_DATA	PCIE_DATA
PCIE_NB_TO_SLOTA_NF<7>	PCIE_NB2SA7	PCIE_NB_TO_SLOTA_7_F	PCIE_DATA	PCIE_DATA
PCIE_NB_TO_SLOTA_PF<7>	PCIE_NB2SA7	PCIE_NB_TO_SLOTA_7_F	PCIE_DATA	PCIE_DATA
PCIE_NB_TO_SLOTA_NF<8>	PCIE_NB2SA8	PCIE_NB_TO_SLOTA_8_F	PCIE_DATA	PCIE_DATA
PCIE_NB_TO_SLOTA_PF<8>	PCIE_NB2SA8	PCIE_NB_TO_SLOTA_8_F	PCIE_DATA	PCIE_DATA
PCIE_NB_TO_SLOTA_NF<9>	PCIE_NB2SA9	PCIE_NB_TO_SLOTA_9_F	PCIE_DATA	PCIE_DATA
PCIE_NB_TO_SLOTA_PF<9>	PCIE_NB2SA9	PCIE_NB_TO_SLOTA_9_F	PCIE_DATA	PCIE_DATA
PCIE_NB_TO_SLOTA_NF<10>	PCIE_NB2SA10	PCIE_NB_TO_SLOTA_10_F	PCIE_DATA	PCIE_DATA
PCIE_NB_TO_SLOTA_PF<10>	PCIE_NB2SA10	PCIE_NB_TO_SLOTA_10_F	PCIE_DATA	PCIE_DATA
PCIE_NB_TO_SLOTA_NF<11>	PCIE_NB2SA11	PCIE_NB_TO_SLOTA_11_F	PCIE_DATA	PCIE_DATA
PCIE_NB_TO_SLOTA_PF<11>	PCIE_NB2SA11	PCIE_NB_TO_SLOTA_11_F	PCIE_DATA	PCIE_DATA
PCIE_NB_TO_SLOTA_NF<12>	PCIE_NB2SA12	PCIE_NB_TO_SLOTA_12_F	PCIE_DATA	PCIE_DATA
PCIE_NB_TO_SLOTA_PF<12>	PCIE_NB2SA12	PCIE_NB_TO_SLOTA_12_F	PCIE_DATA	PCIE_DATA
PCIE_NB_TO_SLOTA_NF<13>	PCIE_NB2SA13	PCIE_NB_TO_SLOTA_13_F	PCIE_DATA	PCIE_DATA
PCIE_NB_TO_SLOTA_PF<13>	PCIE_NB2SA13	PCIE_NB_TO_SLOTA_13_F	PCIE_DATA	PCIE_DATA
PCIE_NB_TO_SLOTA_NF<14>	PCIE_NB2SA14	PCIE_NB_TO_SLOTA_14_F	PCIE_DATA	PCIE_DATA
PCIE_NB_TO_SLOTA_PF<14>	PCIE_NB2SA14	PCIE_NB_TO_SLOTA_14_F	PCIE_DATA	PCIE_DATA
PCIE_NB_TO_SLOTA_NF<15>	PCIE_NB2SA15	PCIE_NB_TO_SLOTA_15_F	PCIE_DATA	PCIE_DATA
PCIE_NB_TO_SLOTA_PF<15>	PCIE_NB2SA15	PCIE_NB_TO_SLOTA_15_F	PCIE_DATA	PCIE_DATA
PCIE_NB_TO_SLOTA_N<0>		PCIE_NB_TO_SLOTA_0	PCIE_DATA	PCIE_DATA
PCIE_NB_TO_SLOTA_P<0>		PCIE_NB_TO_SLOTA_0	PCIE_DATA	PCIE_DATA
PCIE_NB_TO_SLOTA_N<1>		PCIE_NB_TO_SLOTA_1	PCIE_DATA	PCIE_DATA
PCIE_NB_TO_SLOTA_P<1>		PCIE_NB_TO_SLOTA_1	PCIE_DATA	PCIE_DATA
PCIE_NB_TO_SLOTA_N<2>		PCIE_NB_TO_SLOTA_2	PCIE_DATA	PCIE_DATA
PCIE_NB_TO_SLOTA_P<2>		PCIE_NB_TO_SLOTA_2	PCIE_DATA	PCIE_DATA
PCIE_NB_TO_SLOTA_N<3>		PCIE_NB_TO_SLOTA_3	PCIE_DATA	PCIE_DATA
PCIE_NB_TO_SLOTA_P<3>		PCIE_NB_TO_SLOTA_3	PCIE_DATA	PCIE_DATA
PCIE_NB_TO_SLOTA_N<4>		PCIE_NB_TO_SLOTA_4	PCIE_DATA	PCIE_DATA
PCIE_NB_TO_SLOTA_P<4>		PCIE_NB_TO_SLOTA_4	PCIE_DATA	PCIE_DATA
PCIE_NB_TO_SLOTA_N<5>		PCIE_NB_TO_SLOTA_5	PCIE_DATA	PCIE_DATA
PCIE_NB_TO_SLOTA_P<5>		PCIE_NB_TO_SLOTA_5	PCIE_DATA	PCIE_DATA
PCIE_NB_TO_SLOTA_N<6>		PCIE_NB_TO_SLOTA_6	PCIE_DATA	PCIE_DATA
PCIE_NB_TO_SLOTA_P<6>		PCIE_NB_TO_SLOTA_6	PCIE_DATA	PCIE_DATA
PCIE_NB_TO_SLOTA_N<7>		PCIE_NB_TO_SLOTA_7	PCIE_DATA	PCIE_DATA
PCIE_NB_TO_SLOTA_P<7>		PCIE_NB_TO_SLOTA_7	PCIE_DATA	PCIE_DATA
PCIE_NB_TO_SLOTA_N<8>		PCIE_NB_TO_SLOTA_8	PCIE_DATA	PCIE_DATA
PCIE_NB_TO_SLOTA_P<8>		PCIE_NB_TO_SLOTA_8	PCIE_DATA	PCIE_DATA
PCIE_NB_TO_SLOTA_N<9>		PCIE_NB_TO_SLOTA_9	PCIE_DATA	PCIE_DATA
PCIE_NB_TO_SLOTA_P<9>		PCIE_NB_TO_SLOTA_9	PCIE_DATA	PCIE_DATA
PCIE_NB_TO_SLOTA_N<10>		PCIE_NB_TO_SLOTA_10	PCIE_DATA	PCIE_DATA
PCIE_NB_TO_SLOTA_P<10>		PCIE_NB_TO_SLOTA_10	PCIE_DATA	PCIE_DATA
PCIE_NB_TO_SLOTA_N<11>		PCIE_NB_TO_SLOTA_11	PCIE_DATA	PCIE_DATA
PCIE_NB_TO_SLOTA_P<11>		PCIE_NB_TO_SLOTA_11	PCIE_DATA	PCIE_DATA
PCIE_NB_TO_SLOTA_N<12>		PCIE_NB_TO_SLOTA_12	PCIE_DATA	PCIE_DATA
PCIE_NB_TO_SLOTA_P<12>		PCIE_NB_TO_SLOTA_12	PCIE_DATA	PCIE_DATA
PCIE_NB_TO_SLOTA_N<13>		PCIE_NB_TO_SLOTA_13	PCIE_DATA	PCIE_DATA
PCIE_NB_TO_SLOTA_P<13>		PCIE_NB_TO_SLOTA_13	PCIE_DATA	PCIE_DATA
PCIE_NB_TO_SLOTA_N<14>		PCIE_NB_TO_SLOTA_14	PCIE_DATA	PCIE_DATA
PCIE_NB_TO_SLOTA_P<14>		PCIE_NB_TO_SLOTA_14	PCIE_DATA	PCIE_DATA
PCIE_NB_TO_SLOTA_N<15>		PCIE_NB_TO_SLOTA_15	PCIE_DATA	PCIE_DATA
PCIE_NB_TO_SLOTA_P<15>		PCIE_NB_TO_SLOTA_15	PCIE_DATA	PCIE_DATA

KODIAK PCI-E POWER PHYSICAL CONSTRAINT TABLE

SIG_NAME	MIN_LINE_WIDTH	MIN_NECK_WIDTH	VOLTAGE
KOD_G10_GND	0.3MM	0.25MM	0
KOD_H05_GND	0.3MM	0.25MM	0
KOD_H08_GND	0.3MM	0.25MM	0
KOD_J13_GND	0.3MM	0.25MM	0
KOD_K07_GND	0.3MM	0.25MM	0
KOD_L13_GND	0.3MM	0.25MM	0
PWR_PCIE_A_AVDD	0.3MM	0.25MM	1.2
PWR_PCIE_A_AVDD_2	0.3MM	0.25MM	1.2
PWR_PCIE_A_AVDD_1	0.3MM	0.25MM	1.2
PWR_PCIE_A_AVDD_0	0.3MM	0.25MM	1.2
PWR_PCIE_A_AVDD_A	0.3MM	0.25MM	1.2
PWR_PCIE_A_AVDD_B	0.3MM	0.25MM	1.2
PWR_PCIE_A_AVDD_C	0.3MM	0.25MM	1.2
PWR_PCIE_A_AVDD_2	0.3MM	0.25MM	1.2
PWR_PCIE_A_AVDD_0	0.3MM	0.25MM	1.2

SIG_NAME	ELECTRICAL_CONSTRAINT_SET	DIFFERENTIAL_PAIR	NET_PHYSICAL_TYPE	NET_SPACING_TYPE
CLK_PCIE_SLOTA_N<0>		KODPCIE_CLK	PCIE_CLK	PCIE_CLK
CLK_PCIE_SLOTA_P<0>		KODPCIE_CLK	PCIE_CLK	PCIE_CLK
CLK_PCIE_SLOTA_NF<0>		KODPCIE_CLKF	PCIE_CLK	PCIE_CLK
CLK_PCIE_SLOTA_PF<0>		KODPCIE_CLKF	PCIE_CLK	PCIE_CLK
CKA_P<0>		CLK_SLOTA_CKA	PCIE_CLK	PCIE_CLK
CKA_N<0>		CLK_SLOTA_CKA	PCIE_CLK	PCIE_CLK
PCIE_SLOTA_TO_NB_NF<0>	PCIE_SA2NB0	PCIE_SLOTA_TO_NB_0_F	PCIE_DATA	PCIE_DATA
PCIE_SLOTA_TO_NB_PF<0>	PCIE_SA2NB0	PCIE_SLOTA_TO_NB_0_F	PCIE_DATA	PCIE_DATA
PCIE_SLOTA_TO_NB_NF<1>	PCIE_SA2NB1	PCIE_SLOTA_TO_NB_1_F	PCIE_DATA	PCIE_DATA
PCIE_SLOTA_TO_NB_PF<1>	PCIE_SA2NB1	PCIE_SLOTA_TO_NB_1_F	PCIE_DATA	PCIE_DATA
PCIE_SLOTA_TO_NB_NF<2>	PCIE_SA2NB2	PCIE_SLOTA_TO_NB_2_F	PCIE_DATA	PCIE_DATA
PCIE_SLOTA_TO_NB_PF<2>	PCIE_SA2NB2	PCIE_SLOTA_TO_NB_2_F	PCIE_DATA	PCIE_DATA
PCIE_SLOTA_TO_NB_NF<3>	PCIE_SA2NB3	PCIE_SLOTA_TO_NB_3_F	PCIE_DATA	PCIE_DATA
PCIE_SLOTA_TO_NB_PF<3>	PCIE_SA2NB3	PCIE_SLOTA_TO_NB_3_F	PCIE_DATA	PCIE_DATA
PCIE_SLOTA_TO_NB_NF<4>	PCIE_SA2NB4	PCIE_SLOTA_TO_NB_4_F	PCIE_DATA	PCIE_DATA
PCIE_SLOTA_TO_NB_PF<4>	PCIE_SA2NB4	PCIE_SLOTA_TO_NB_4_F	PCIE_DATA	PCIE_DATA
PCIE_SLOTA_TO_NB_NF<5>	PCIE_SA2NB5	PCIE_SLOTA_TO_NB_5_F	PCIE_DATA	PCIE_DATA
PCIE_SLOTA_TO_NB_PF<5>	PCIE_SA2NB5	PCIE_SLOTA_TO_NB_5_F	PCIE_DATA	PCIE_DATA
PCIE_SLOTA_TO_NB_NF<6>	PCIE_SA2NB6	PCIE_SLOTA_TO_NB_6_F	PCIE_DATA	PCIE_DATA
PCIE_SLOTA_TO_NB_PF<6>	PCIE_SA2NB6	PCIE_SLOTA_TO_NB_6_F	PCIE_DATA	PCIE_DATA
PCIE_SLOTA_TO_NB_NF<7>	PCIE_SA2NB7	PCIE_SLOTA_TO_NB_7_F	PCIE_DATA	PCIE_DATA
PCIE_SLOTA_TO_NB_PF<7>	PCIE_SA2NB7	PCIE_SLOTA_TO_NB_7_F	PCIE_DATA	PCIE_DATA
PCIE_SLOTA_TO_NB_NF<8>	PCIE_SA2NB8	PCIE_SLOTA_TO_NB_8_F	PCIE_DATA	PCIE_DATA
PCIE_SLOTA_TO_NB_PF<8>	PCIE_SA2NB8	PCIE_SLOTA_TO_NB_8_F	PCIE_DATA	PCIE_DATA
PCIE_SLOTA_TO_NB_NF<9>	PCIE_SA2NB9	PCIE_SLOTA_TO_NB_9_F	PCIE_DATA	PCIE_DATA
PCIE_SLOTA_TO_NB_PF<9>	PCIE_SA2NB9	PCIE_SLOTA_TO_NB_9_F	PCIE_DATA	PCIE_DATA
PCIE_SLOTA_TO_NB_NF<10>	PCIE_SA2NB10	PCIE_SLOTA_TO_NB_10_F	PCIE_DATA	PCIE_DATA
PCIE_SLOTA_TO_NB_PF<10>	PCIE_SA2NB10	PCIE_SLOTA_TO_NB_10_F	PCIE_DATA	PCIE_DATA
PCIE_SLOTA_TO_NB_NF<11>	PCIE_SA2NB11	PCIE_SLOTA_TO_NB_11_F	PCIE_DATA	PCIE_DATA
PCIE_SLOTA_TO_NB_PF<11>	PCIE_SA2NB11	PCIE_SLOTA_TO_NB_11_F	PCIE_DATA	PCIE_DATA
PCIE_SLOTA_TO_NB_NF<12>	PCIE_SA2NB12	PCIE_SLOTA_TO_NB_12_F	PCIE_DATA	PCIE_DATA
PCIE_SLOTA_TO_NB_PF<12>	PCIE_SA2NB12	PCIE_SLOTA_TO_NB_12_F	PCIE_DATA	PCIE_DATA
PCIE_SLOTA_TO_NB_NF<13>	PCIE_SA2NB13	PCIE_SLOTA_TO_NB_13_F	PCIE_DATA	PCIE_DATA
PCIE_SLOTA_TO_NB_PF<13>	PCIE_SA2NB13	PCIE_SLOTA_TO_NB_13_F	PCIE_DATA	PCIE_DATA
PCIE_SLOTA_TO_NB_NF<14>	PCIE_SA2NB14	PCIE_SLOTA_TO_NB_14_F	PCIE_DATA	PCIE_DATA
PCIE_SLOTA_TO_NB_PF<14>	PCIE_SA2NB14	PCIE_SLOTA_TO_NB_14_F	PCIE_DATA	PCIE_DATA
PCIE_SLOTA_TO_NB_NF<15>	PCIE_SA2NB15	PCIE_SLOTA_TO_NB_15_F	PCIE_DATA	PCIE_DATA
PCIE_SLOTA_TO_NB_PF<15>	PCIE_SA2NB15	PCIE_SLOTA_TO_NB_15_F	PCIE_DATA	PCIE_DATA
PCIE_SLOTA_TO_NB_N<0>		PCIE_SLOTA_TO_NB_0	PCIE_DATA	PCIE_DATA
PCIE_SLOTA_TO_NB_P<0>		PCIE_SLOTA_TO_NB_0	PCIE_DATA	PCIE_DATA
PCIE_SLOTA_TO_NB_N<1>		PCIE_SLOTA_TO_NB_1	PCIE_DATA	PCIE_DATA
PCIE_SLOTA_TO_NB_P<1>		PCIE_SLOTA_TO_NB_1	PCIE_DATA	PCIE_DATA
PCIE_SLOTA_TO_NB_N<2>		PCIE_SLOTA_TO_NB_2	PCIE_DATA	PCIE_DATA
PCIE_SLOTA_TO_NB_P<2>		PCIE_SLOTA_TO_NB_2	PCIE_DATA	PCIE_DATA
PCIE_SLOTA_TO_NB_N<3>		PCIE_SLOTA_TO_NB_3	PCIE_DATA	PCIE_DATA
PCIE_SLOTA_TO_NB_P<3>		PCIE_SLOTA_TO_NB_3	PCIE_DATA	PCIE_DATA
PCIE_SLOTA_TO_NB_N<4>		PCIE_SLOTA_TO_NB_4	PCIE_DATA	PCIE_DATA
PCIE_SLOTA_TO_NB_P<4>		PCIE_SLOTA_TO_NB_4	PCIE_DATA	PCIE_DATA
PCIE_SLOTA_TO_NB_N<5>		PCIE_SLOTA_TO_NB_5	PCIE_DATA	PCIE_DATA
PCIE_SLOTA_TO_NB_P<5>		PCIE_SLOTA_TO_NB_5	PCIE_DATA	PCIE_DATA
PCIE_SLOTA_TO_NB_N<6>		PCIE_SLOTA_TO_NB_6	PCIE_DATA	PCIE_DATA
PCIE_SLOTA_TO_NB_P<6>		PCIE_SLOTA_TO_NB_6	PCIE_DATA	PCIE_DATA
PCIE_SLOTA_TO_NB_N<7>		PCIE_SLOTA_TO_NB_7	PCIE_DATA	PCIE_DATA
PCIE_SLOTA_TO_NB_P<7>		PCIE_SLOTA_TO_NB_7	PCIE_DATA	PCIE_DATA
PCIE_SLOTA_TO_NB_N<8>		PCIE_SLOTA_TO_NB_8	PCIE_DATA	PCIE_DATA
PCIE_SLOTA_TO_NB_P<8>		PCIE_SLOTA_TO_NB_8	PCIE_DATA	PCIE_DATA
PCIE_SLOTA_TO_NB_N<9>		PCIE_SLOTA_TO_NB_9	PCIE_DATA	PCIE_DATA
PCIE_SLOTA_TO_NB_P<9>		PCIE_SLOTA_TO_NB_9	PCIE_DATA	PCIE_DATA
PCIE_SLOTA_TO_NB_N<10>		PCIE_SLOTA_TO_NB_10	PCIE_DATA	PCIE_DATA
PCIE_SLOTA_TO_NB_P<10>		PCIE_SLOTA_TO_NB_10	PCIE_DATA	PCIE_DATA
PCIE_SLOTA_TO_NB_N<11>		PCIE_SLOTA_TO_NB_11	PCIE_DATA	PCIE_DATA
PCIE_SLOTA_TO_NB_P<11>		PCIE_SLOTA_TO_NB_11	PCIE_DATA	PCIE_DATA
PCIE_SLOTA_TO_NB_N<12>		PCIE_SLOTA_TO_NB_12	PCIE_DATA	PCIE_DATA
PCIE_SLOTA_TO_NB_P<12>		PCIE_SLOTA_TO_NB_12	PCIE_DATA	PCIE_DATA
PCIE_SLOTA_TO_NB_N<13>		PCIE_SLOTA_TO_NB_13	PCIE_DATA	PCIE_DATA
PCIE_SLOTA_TO_NB_P<13>		PCIE_SLOTA_TO_NB_13	PCIE_DATA	PCIE_DATA
PCIE_SLOTA_TO_NB_N<14>		PCIE_SLOTA_TO_NB_14	PCIE_DATA	PCIE_DATA
PCIE_SLOTA_TO_NB_P<14>		PCIE_SLOTA_TO_NB_14	PCIE_DATA	PCIE_DATA
PCIE_SLOTA_TO_NB_N<15>		PCIE_SLOTA_TO_NB_15	PCIE_DATA	PCIE_DATA
PCIE_SLOTA_TO_NB_P<15>		PCIE_SLOTA_TO_NB_15	PCIE_DATA	PCIE_DATA

KODIAK PCI-E CONST

SYNC_MASTER=FINO-DD SYNC_DATE=06/20/2005

NOTICE OF PROPRIETARY PROPERTY

THE INFORMATION CONTAINED HEREIN IS THE PROPRIETARY PROPERTY OF APPLE COMPUTER, INC. THE POSSESSOR AGREES TO THE FOLLOWING

I TO MAINTAIN THE DOCUMENT IN CONFIDENCE

II NOT TO REPRODUCE OR COPY IT

III NOT TO REVEAL OR PUBLISH IN WHOLE OR PART

APPLE COMPUTER INC.

SIZE	DRAWING NUMBER	REV.
D	051-6790	E

SCALE NONE SHT 97 OF 154

www.laptop-schematics.com

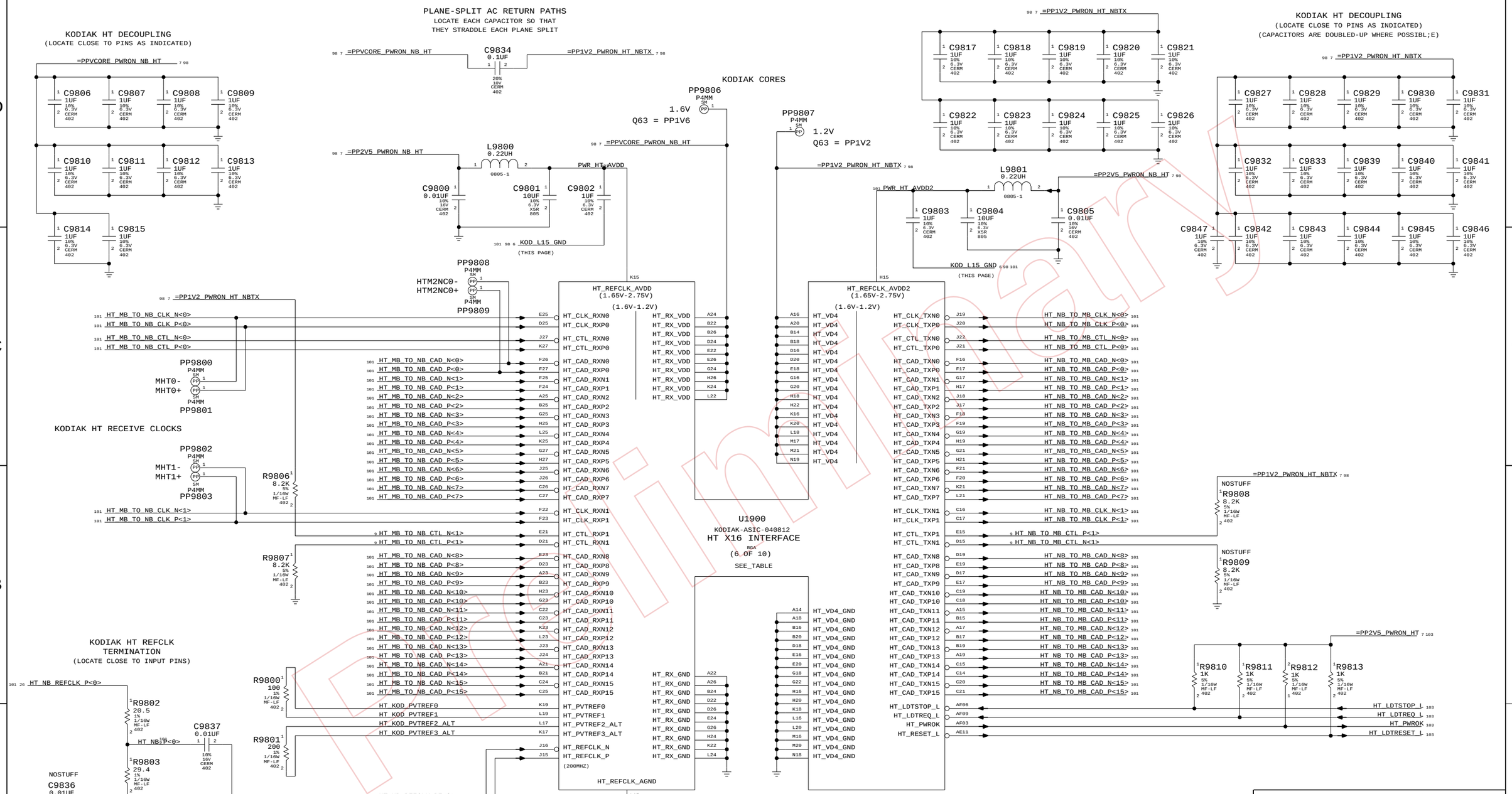

www.laptop-schematics.com

SIG_NAME	MAKE_BASE	DIFFERENTIAL_PAIR	EC_SET	NET_PHYSICAL_TYPE	NET_SPACING_TYPE		
98 HT_NB_TO_MB_CLK_N<0> 9	HT_NB_TO_SB_CLK_N<0>	TRUE	HT_NB_TO_SB_CLK	HT_NB_TO_SB_PP	HT_CAD	HT_NB_TO_SB_CLK	HT_MB_TO_SB_CLK_N<0> 103
98 HT_NB_TO_MB_CLK_P<0> 9	HT_NB_TO_SB_CLK_P<0>	TRUE	HT_NB_TO_SB_CLK	HT_NB_TO_SB_PP	HT_CAD	HT_NB_TO_SB_CLK	HT_MB_TO_SB_CLK_P<0> 103
98 HT_NB_TO_MB_CAD_N<0> 9	HT_NB_TO_SB_CAD_N<0>	TRUE	HT_NB_TO_SB_CAD0	HT_NB_TO_SB_PP	HT_CAD	HT_NB_TO_SB_CAD	HT_MB_TO_SB_CAD_N<0> 103
98 HT_NB_TO_MB_CAD_P<0> 9	HT_NB_TO_SB_CAD_P<0>	TRUE	HT_NB_TO_SB_CAD0	HT_NB_TO_SB_PP	HT_CAD	HT_NB_TO_SB_CAD	HT_MB_TO_SB_CAD_P<0> 103
98 HT_NB_TO_MB_CAD_N<1> 9	HT_NB_TO_SB_CAD_N<1>	TRUE	HT_NB_TO_SB_CAD1	HT_NB_TO_SB	HT_CAD	HT_NB_TO_SB_CAD	HT_MB_TO_SB_CAD_N<1> 103
98 HT_NB_TO_MB_CAD_P<1> 9	HT_NB_TO_SB_CAD_P<1>	TRUE	HT_NB_TO_SB_CAD1	HT_NB_TO_SB	HT_CAD	HT_NB_TO_SB_CAD	HT_MB_TO_SB_CAD_P<1> 103
98 HT_NB_TO_MB_CAD_N<2> 9	HT_NB_TO_SB_CAD_N<2>	TRUE	HT_NB_TO_SB_CAD2	HT_NB_TO_SB	HT_CAD	HT_NB_TO_SB_CAD	HT_MB_TO_SB_CAD_N<2> 103
98 HT_NB_TO_MB_CAD_P<2> 9	HT_NB_TO_SB_CAD_P<2>	TRUE	HT_NB_TO_SB_CAD2	HT_NB_TO_SB	HT_CAD	HT_NB_TO_SB_CAD	HT_MB_TO_SB_CAD_P<2> 103
98 HT_NB_TO_MB_CAD_N<3> 9	HT_NB_TO_SB_CAD_N<3>	TRUE	HT_NB_TO_SB_CAD3	HT_NB_TO_SB	HT_CAD	HT_NB_TO_SB_CAD	HT_MB_TO_SB_CAD_N<3> 103
98 HT_NB_TO_MB_CAD_P<3> 9	HT_NB_TO_SB_CAD_P<3>	TRUE	HT_NB_TO_SB_CAD3	HT_NB_TO_SB	HT_CAD	HT_NB_TO_SB_CAD	HT_MB_TO_SB_CAD_P<3> 103
98 HT_NB_TO_MB_CAD_N<4> 9	HT_NB_TO_SB_CAD_N<4>	TRUE	HT_NB_TO_SB_CAD4	HT_NB_TO_SB	HT_CAD	HT_NB_TO_SB_CAD	HT_MB_TO_SB_CAD_N<4> 103
98 HT_NB_TO_MB_CAD_P<4> 9	HT_NB_TO_SB_CAD_P<4>	TRUE	HT_NB_TO_SB_CAD4	HT_NB_TO_SB	HT_CAD	HT_NB_TO_SB_CAD	HT_MB_TO_SB_CAD_P<4> 103
98 HT_NB_TO_MB_CAD_N<5> 9	HT_NB_TO_SB_CAD_N<5>	TRUE	HT_NB_TO_SB_CAD5	HT_NB_TO_SB	HT_CAD	HT_NB_TO_SB_CAD	HT_MB_TO_SB_CAD_N<5> 103
98 HT_NB_TO_MB_CAD_P<5> 9	HT_NB_TO_SB_CAD_P<5>	TRUE	HT_NB_TO_SB_CAD5	HT_NB_TO_SB	HT_CAD	HT_NB_TO_SB_CAD	HT_MB_TO_SB_CAD_P<5> 103
98 HT_NB_TO_MB_CAD_N<6> 9	HT_NB_TO_SB_CAD_N<6>	TRUE	HT_NB_TO_SB_CAD6	HT_NB_TO_SB	HT_CAD	HT_NB_TO_SB_CAD	HT_MB_TO_SB_CAD_N<6> 103
98 HT_NB_TO_MB_CAD_P<6> 9	HT_NB_TO_SB_CAD_P<6>	TRUE	HT_NB_TO_SB_CAD6	HT_NB_TO_SB	HT_CAD	HT_NB_TO_SB_CAD	HT_MB_TO_SB_CAD_P<6> 103
98 HT_NB_TO_MB_CAD_N<7> 9	HT_NB_TO_SB_CAD_N<7>	TRUE	HT_NB_TO_SB_CAD7	HT_NB_TO_SB	HT_CAD	HT_NB_TO_SB_CAD	HT_MB_TO_SB_CAD_N<7> 103
98 HT_NB_TO_MB_CAD_P<7> 9	HT_NB_TO_SB_CAD_P<7>	TRUE	HT_NB_TO_SB_CAD7	HT_NB_TO_SB	HT_CAD	HT_NB_TO_SB_CAD	HT_MB_TO_SB_CAD_P<7> 103
98 HT_NB_TO_MB_CTL_N<0> 9	HT_NB_TO_SB_CTL_N<0>	TRUE	HT_NB_TO_SB_CTL0	HT_NB_TO_SB	HT_CAD	HT_NB_TO_SB_CAD	HT_MB_TO_SB_CTL_N<0> 103
98 HT_NB_TO_MB_CTL_P<0> 9	HT_NB_TO_SB_CTL_P<0>	TRUE	HT_NB_TO_SB_CTL0	HT_NB_TO_SB	HT_CAD	HT_NB_TO_SB_CAD	HT_MB_TO_SB_CTL_P<0> 103
98 HT_MB_TO_NB_CLK_N<0> 9	HT_SB_TO_NB_CLK_N<0>	TRUE	HT_SB_TO_NB_CLK	HT_SB_TO_NB_PP	HT_CAD	HT_SB_TO_NB_CLK	HT_SB_TO_MB_CLK_N<0> 103
98 HT_MB_TO_NB_CLK_P<0> 9	HT_SB_TO_NB_CLK_P<0>	TRUE	HT_SB_TO_NB_CLK	HT_SB_TO_NB_PP	HT_CAD	HT_SB_TO_NB_CLK	HT_SB_TO_MB_CLK_P<0> 103
98 HT_MB_TO_NB_CAD_N<0> 9	HT_SB_TO_NB_CAD_N<0>	TRUE	HT_SB_TO_NB_CAD0	HT_SB_TO_NB_PP	HT_CAD	HT_SB_TO_NB_CAD	HT_SB_TO_MB_CAD_N<0> 103
98 HT_MB_TO_NB_CAD_P<0> 9	HT_SB_TO_NB_CAD_P<0>	TRUE	HT_SB_TO_NB_CAD0	HT_SB_TO_NB_PP	HT_CAD	HT_SB_TO_NB_CAD	HT_SB_TO_MB_CAD_P<0> 103
98 HT_MB_TO_NB_CAD_N<1> 9	HT_SB_TO_NB_CAD_N<1>	TRUE	HT_SB_TO_NB_CAD1	HT_SB_TO_NB	HT_CAD	HT_SB_TO_NB_CAD	HT_SB_TO_MB_CAD_N<1> 103
98 HT_MB_TO_NB_CAD_P<1> 9	HT_SB_TO_NB_CAD_P<1>	TRUE	HT_SB_TO_NB_CAD1	HT_SB_TO_NB	HT_CAD	HT_SB_TO_NB_CAD	HT_SB_TO_MB_CAD_P<1> 103
98 HT_MB_TO_NB_CAD_N<2> 9	HT_SB_TO_NB_CAD_N<2>	TRUE	HT_SB_TO_NB_CAD2	HT_SB_TO_NB	HT_CAD	HT_SB_TO_NB_CAD	HT_SB_TO_MB_CAD_N<2> 103
98 HT_MB_TO_NB_CAD_P<2> 9	HT_SB_TO_NB_CAD_P<2>	TRUE	HT_SB_TO_NB_CAD2	HT_SB_TO_NB	HT_CAD	HT_SB_TO_NB_CAD	HT_SB_TO_MB_CAD_P<2> 103
98 HT_MB_TO_NB_CAD_N<3> 9	HT_SB_TO_NB_CAD_N<3>	TRUE	HT_SB_TO_NB_CAD3	HT_SB_TO_NB	HT_CAD	HT_SB_TO_NB_CAD	HT_SB_TO_MB_CAD_N<3> 103
98 HT_MB_TO_NB_CAD_P<3> 9	HT_SB_TO_NB_CAD_P<3>	TRUE	HT_SB_TO_NB_CAD3	HT_SB_TO_NB	HT_CAD	HT_SB_TO_NB_CAD	HT_SB_TO_MB_CAD_P<3> 103
98 HT_MB_TO_NB_CAD_N<4> 9	HT_SB_TO_NB_CAD_N<4>	TRUE	HT_SB_TO_NB_CAD4	HT_SB_TO_NB	HT_CAD	HT_SB_TO_NB_CAD	HT_SB_TO_MB_CAD_N<4> 103
98 HT_MB_TO_NB_CAD_P<4> 9	HT_SB_TO_NB_CAD_P<4>	TRUE	HT_SB_TO_NB_CAD4	HT_SB_TO_NB	HT_CAD	HT_SB_TO_NB_CAD	HT_SB_TO_MB_CAD_P<4> 103
98 HT_MB_TO_NB_CAD_N<5> 9	HT_SB_TO_NB_CAD_N<5>	TRUE	HT_SB_TO_NB_CAD5	HT_SB_TO_NB	HT_CAD	HT_SB_TO_NB_CAD	HT_SB_TO_MB_CAD_N<5> 103
98 HT_MB_TO_NB_CAD_P<5> 9	HT_SB_TO_NB_CAD_P<5>	TRUE	HT_SB_TO_NB_CAD5	HT_SB_TO_NB	HT_CAD	HT_SB_TO_NB_CAD	HT_SB_TO_MB_CAD_P<5> 103
98 HT_MB_TO_NB_CAD_N<6> 9	HT_SB_TO_NB_CAD_N<6>	TRUE	HT_SB_TO_NB_CAD6	HT_SB_TO_NB	HT_CAD	HT_SB_TO_NB_CAD	HT_SB_TO_MB_CAD_N<6> 103
98 HT_MB_TO_NB_CAD_P<6> 9	HT_SB_TO_NB_CAD_P<6>	TRUE	HT_SB_TO_NB_CAD6	HT_SB_TO_NB	HT_CAD	HT_SB_TO_NB_CAD	HT_SB_TO_MB_CAD_P<6> 103
98 HT_MB_TO_NB_CAD_N<7> 9	HT_SB_TO_NB_CAD_N<7>	TRUE	HT_SB_TO_NB_CAD7	HT_SB_TO_NB	HT_CAD	HT_SB_TO_NB_CAD	HT_SB_TO_MB_CAD_N<7> 103
98 HT_MB_TO_NB_CAD_P<7> 9	HT_SB_TO_NB_CAD_P<7>	TRUE	HT_SB_TO_NB_CAD7	HT_SB_TO_NB	HT_CAD	HT_SB_TO_NB_CAD	HT_SB_TO_MB_CAD_P<7> 103
98 HT_MB_TO_NB_CTL_N<0> 9	HT_SB_TO_NB_CTL_N<0>	TRUE	HT_SB_TO_NB_CTL0	HT_SB_TO_NB	HT_CAD	HT_SB_TO_NB_CAD	HT_SB_TO_MB_CTL_N<0> 103
98 HT_MB_TO_NB_CTL_P<0> 9	HT_SB_TO_NB_CTL_P<0>	TRUE	HT_SB_TO_NB_CTL0	HT_SB_TO_NB	HT_CAD	HT_SB_TO_NB_CAD	HT_SB_TO_MB_CTL_P<0> 103
6 NC_HT_MB_TO_NB_CAD_P<8..15>		TRUE					HT_MB_TO_NB_CAD_P<8..15> 98
6 NC_HT_MB_TO_NB_CAD_N<8..15>		TRUE					HT_MB_TO_NB_CAD_N<8..15> 98
9 TP_HT_MB_TO_NB_CLK_N<1>		TRUE					HT_MB_TO_NB_CLK_N<1> 98
9 TP_HT_MB_TO_NB_CLK_P<1>		TRUE					HT_MB_TO_NB_CLK_P<1> 98
						I97	
6 NC_HT_NB_TO_MB_CAD_P<8..15>		TRUE					HT_NB_TO_MB_CAD_P<8..15> 98
6 NC_HT_NB_TO_MB_CAD_N<8..15>		TRUE					HT_NB_TO_MB_CAD_N<8..15> 98
6 NC_HT_NB_TO_MB_CLK_N<1>		TRUE					HT_NB_TO_MB_CLK_N<1> 98
6 NC_HT_NB_TO_MB_CLK_P<1>		TRUE					HT_NB_TO_MB_CLK_P<1> 98
98 26 HT_NB_REFCLK_P<0>			HT_NB_REFCLK0	HT_NB_REFCLK	HT_CLK	HT_CLK	IN
98 26 HT_NB_REFCLK_N<0>			HT_NB_REFCLK0		HT_CLK	HT_CLK	IN
98 9 HT_NB_P<0>			HT_NB0		HT_CLK	HT_CLK	IN
98 9 HT_NB_N<0>			HT_NB0		HT_CLK	HT_CLK	IN
98 9 HT_NB_REFCLK_PF<0>			HT_NB_REFCLK_F0		HT_CLK	HT_CLK	IN
98 9 HT_NB_REFCLK_NF<0>			HT_NB_REFCLK_F0		HT_CLK	HT_CLK	IN

SIG_NAME	MIN_LINE_WIDTH	MIN_NECK_WIDTH	VOLTAGE	
98 PWR_HT_AVDD	0.4MM	0.2MM	2.5	IN
98 PWR_HT_AVDD2	0.4MM	0.2MM	2.5	IN
98 6 KOD_L15_GND	0.4MM	0.2MM	0	IN
98 HT_NB_G KEEP DIFF CLOCK FROM BEING A SINGLE XNET			0	IN

HT ALIASES

FINO-ME 06/20/2005

NOTICE OF PROPRIETARY PROPERTY

THE INFORMATION CONTAINED HEREIN IS THE PROPRIETARY PROPERTY OF APPLE COMPUTER, INC. THE POSSESSOR AGREES TO THE FOLLOWING

I TO MAINTAIN THE DOCUMENT IN CONFIDENCE

II NOT TO REPRODUCE OR COPY IT

III NOT TO REVEAL OR PUBLISH IN WHOLE OR PART

APPLE COMPUTER INC.

SIZE	DRAWING NUMBER	REV.
D	051-6790	E
SCALE NONE	SHT 101 OF 154	

Preliminary

www.laptop-schematics.com

ELECTRICAL_CONSTRAINT_SET	NET_SPACING_TYPE	DIFFERENTIAL_PAIR
	0.38mm SPACING	
HT_CLK66M_SB	0.38mm SPACING	
	P3MM SPACING	

HT_CLK66M_SB_C 103
HT_CLK66M_SB 26 103
HT_LDTRESET_L 98 103

Page Notes

Power aliases required by this page:
=PP2V5_PWRON_HT
=PP1V2_PWRON_HT

Signal aliases required by this page:
(NONE)

BOM options provided by this page:
- SB_HT_200M
  Stuffs resistor to select 200MHz HT I/F.

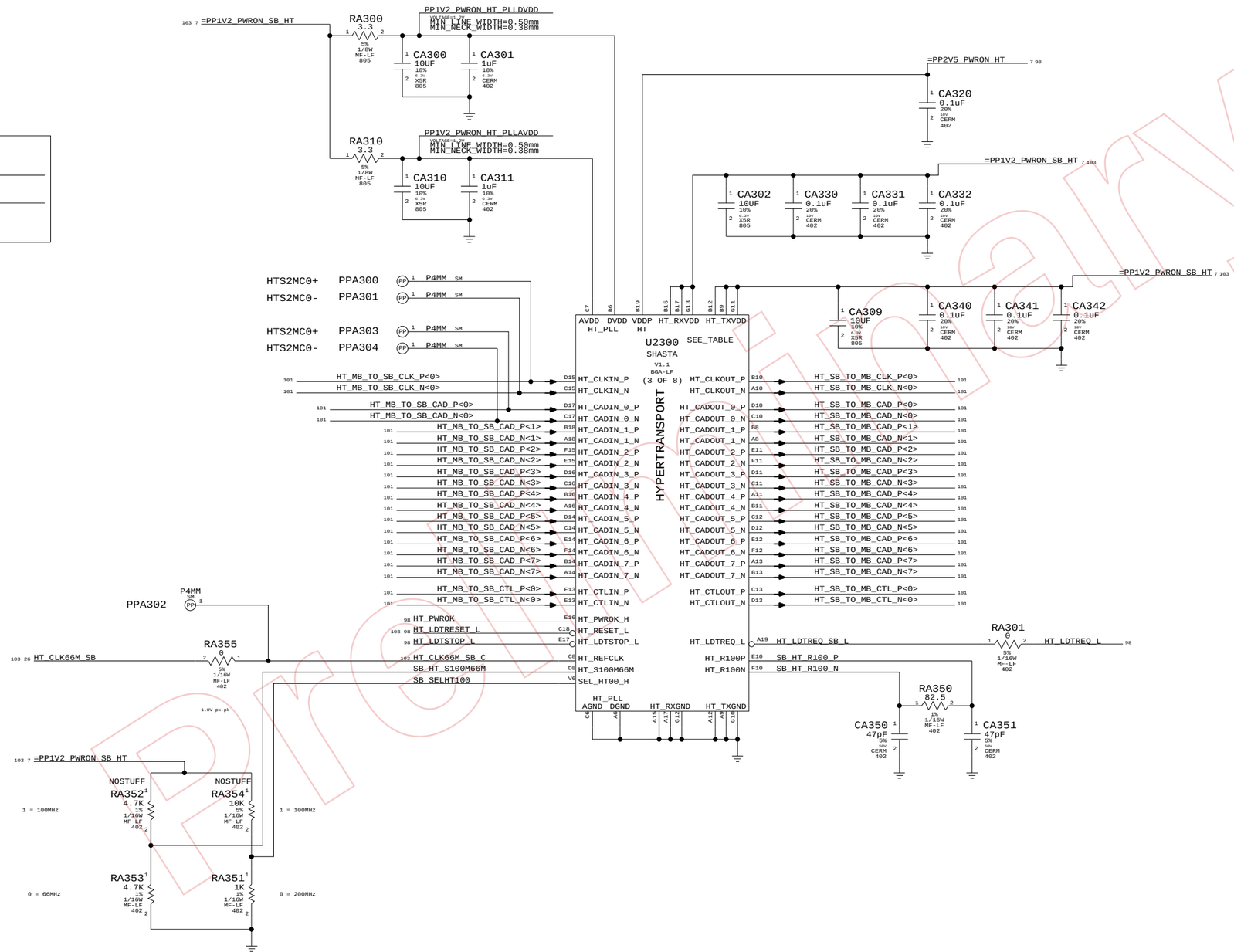

HT RefClk	HT I/F Speed
1 = 100MHz	1 = 100MHz
0 = 66MHz	0 = 200MHz

← DETERMINES THE OPERATING FREQUENCY OF HT CORE
1: THE HT SLAVE, HTGS AND THE HT SIDE OF THE PCI BRIDGES OPERATE AT 100 MHZ
0: THE HT SLAVE, HTGS AND THE HT SIDE OF THE PCI BRIDGES OPERATE AT 200 MHZ

Shasta HyperTransport

SYNC_MASTER=Q63 SYNC_DATE=08/01/2005

NOTICE OF PROPRIETARY PROPERTY

THE INFORMATION CONTAINED HEREIN IS THE PROPRIETARY PROPERTY OF APPLE COMPUTER, INC. THE POSSESSOR AGREES TO THE FOLLOWING

I TO MAINTAIN THE DOCUMENT IN CONFIDENCE
II NOT TO REPRODUCE OR COPY IT
III NOT TO REVEAL OR PUBLISH IN WHOLE OR PART

APPLE COMPUTER INC.

SIZE	DRAWING NUMBER	REV.
D	051-6790	E
SCALE NONE	SHT 103 OF 154	

LAST_MODIFIED=Tue Nov 1 14:55:22 2005

DRAWING
TITLE=K13.DWG&A
A&B&REV=D&N&ENG

Preliminary
www.laptop-schematics.com

ELECTRICAL_CONSTRAINT_SET	NET_SPACING_TYPE	DIFFERENTIAL_PAIR
		PCI_AD<31..28> 120 121 122 125
		PCI_AD<27> 120 121 122 125
		PCI_AD<26..24> 120 121 122 125
		PCI_AD<23> 120 121 122
		PCI_AD<22> 120 121 122
		PCI_AD<21> 120 121 122
		PCI_AD<20> 120 121 122 125
		PCI_AD<19..18> 120 121 122 125
		PCI_AD<17> 120 121 122 125
		PCI_AD<16..0> 120 121 122 125
		PCI_CBE_L<3..0> 120 121 122
		PCI_PAR 120 121 122
		PCI_DEVSEL_L 119 120 121 122
		PCI_FRAME_L 119 120 121 122
		PCI_IRDY_L 119 120 121 122
		PCI_TRDY_L 119 120 121 122
		PCI_STOP_L 119 120 121 122
	P3MM_SPACING	PCI_CLK66M_SB_INT 26 27 119

Q63 APPLICATION OF POWER NET "=PP3V3_SB_PCI" IS RUN

Page Notes

Power aliases required by this page:
- =PP3V3_PCI
- =PP3V3_SB_PCI (CAN BE _PP3V3_PCI)
- =PP3V3_PWRON_SB
- =PP2V5_PWRON_SB

Signal aliases required by this page:
(NONE)

BOM options provided by this page:
(NONE)

PCI Devices implemented on this page:
AD11 - PCI0 (0x106B/0x0053)
AD11 - PCI1 (0x106B/0x0054)
AD11 - PCI2 (0x106B/0x0055)

AD23 - KeyLargo (0x106B/0x004F, PCI1)
AD28 - SATA 150 (0x1166/0x0240, PCI0 or 2)
AD29 - UATA 133 (0x106B/0x0050, PCI0 or 2)
AD30 - FireWire (0x106B/0x0052, PCI0 or 2)
AD31 - Ethernet (0x106B/0x0051, PCI0)

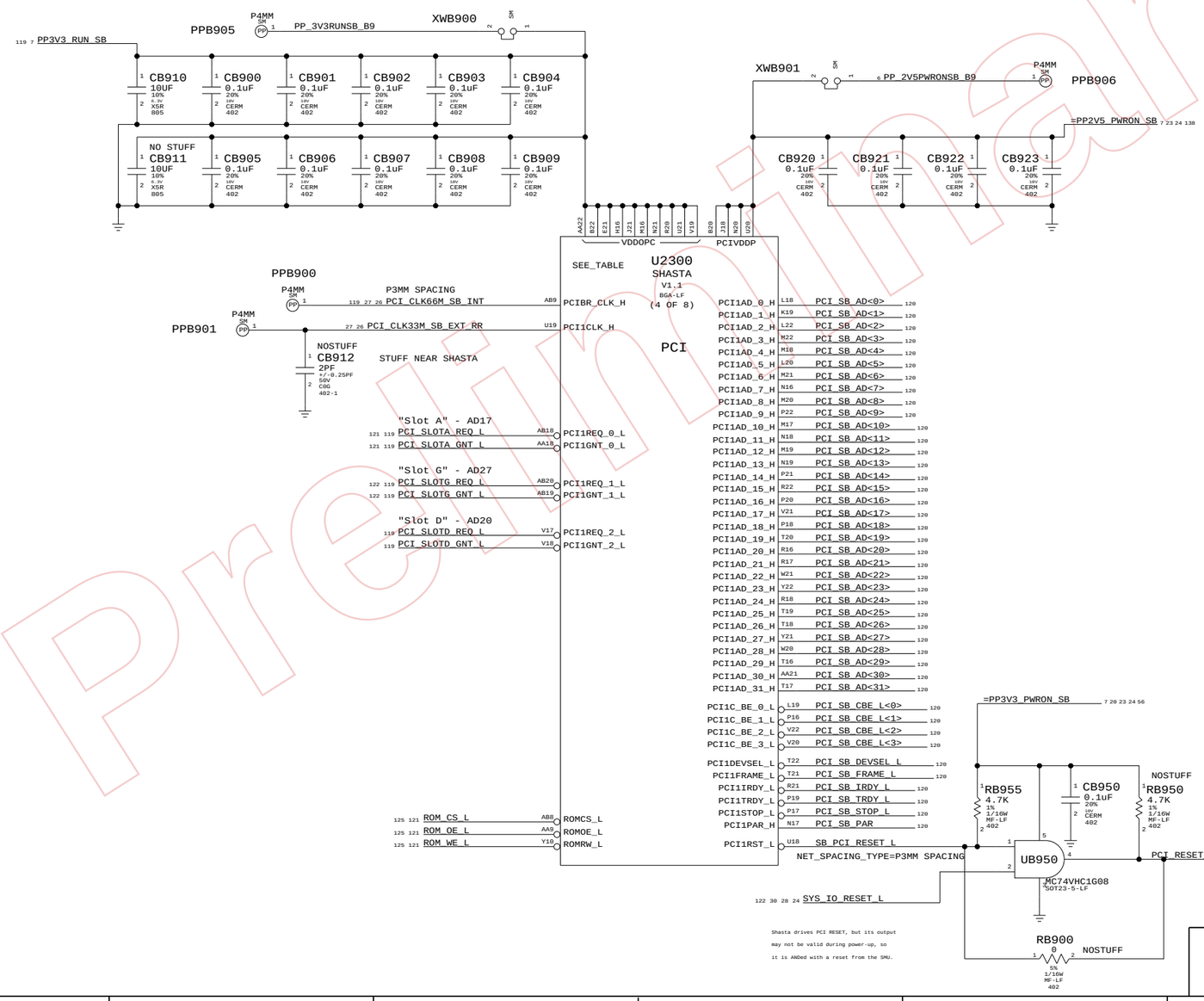

Shasta PCI Interface

SYNC_MASTER=Q63 SYNC_DATE=08/01/2005

NOTICE OF PROPRIETARY PROPERTY

THE INFORMATION CONTAINED HEREIN IS THE PROPRIETARY PROPERTY OF APPLE COMPUTER, INC. THE POSSESSOR AGREES TO THE FOLLOWING

I TO MAINTAIN THE DOCUMENT IN CONFIDENCE

II NOT TO REPRODUCE OR COPY IT

III NOT TO REVEAL OR PUBLISH IN WHOLE OR PART

APPLE COMPUTER INC.

SIZE	DRAWING NUMBER	REV.
D	051-6790	E
SCALE NONE	SHT 119 OF 154	

LAST_MODIFIED=Tue Nov 1 14:55:26 2005

DRAWING

TITLE=K13LOWMA

ABBREV=YORKWING

Preliminary

www.laptop-schematics.com

ALL RESISTOR PACKS ARE 47 OHM 1/16W 5%

R PAKS ARE PIN SWAPPABLE ACROSS ALL SIGNALS (EXCEPT IDSELS)

119	PCI_SB_AD<0>	RPC003	4	5	47	PCI_AD<0>	119 121 122 125
119	PCI_SB_AD<1>	RPC003	1	8	47	PCI_AD<1>	119 121 122 125
119	PCI_SB_AD<2>	RPC009	1	8	47	PCI_AD<2>	119 121 122 125
119	PCI_SB_AD<3>	RPC001	3	6	47	PCI_AD<3>	119 121 122 125
119	PCI_SB_AD<4>	RPC000	3	6	47	PCI_AD<4>	119 121 122 125
119	PCI_SB_AD<5>	RPC003	2	7	47	PCI_AD<5>	119 121 122 125
119	PCI_SB_AD<6>	RPC001	4	5	47	PCI_AD<6>	119 121 122 125
119	PCI_SB_AD<7>	RPC000	2	7	47	PCI_AD<7>	119 121 122 125
119	PCI_SB_AD<8>	RPC007	4	5	47	PCI_AD<8>	119 121 122 125
119	PCI_SB_AD<9>	RPC002	1	8	47	PCI_AD<9>	119 121 122 125
119	PCI_SB_AD<10>	RPC000	1	8	47	PCI_AD<10>	119 121 122 125
119	PCI_SB_AD<11>	RPC009	3	6	47	PCI_AD<11>	119 121 122 125
119	PCI_SB_AD<12>	RPC000	4	5	47	PCI_AD<12>	119 121 122 125
119	PCI_SB_AD<13>	RPC009	4	5	47	PCI_AD<13>	119 121 122 125
119	PCI_SB_AD<14>	RPC002	2	7	47	PCI_AD<14>	119 121 122 125
119	PCI_SB_AD<15>	RPC002	4	5	47	PCI_AD<15>	119 121 122 125
119	PCI_SB_AD<16>	RPC002	3	6	47	PCI_AD<16>	119 121 122 125

RC000

119	PCI_SB_AD<17>		1	2	47 5% 1/16W MF-LF 402	PCI_AD<17>	119 121 122 125

119	PCI_SB_AD<18>	RPC007	1	8	47	PCI_AD<18>	119 121 122 125
119	PCI_SB_AD<19>	RPC006	2	7	47	PCI_AD<19>	119 121 122 125
119	PCI_SB_AD<20>	RPC007	2	7	47	PCI_AD<20>	119 121 122 125
119	PCI_SB_AD<21>	RPC008	1	8	47	PCI_AD<21>	119 121 122
119	PCI_SB_AD<22>	RPC004	1	8	47	PCI_AD<22>	119 121 122
119	PCI_SB_AD<23>	RPC006	4	5	47	PCI_AD<23>	119 121 122
119	PCI_SB_AD<24>	RPC008	4	5	47	PCI_AD<24>	119 121 122 125
119	PCI_SB_AD<25>	RPC006	3	6	47	PCI_AD<25>	119 121 122 125
119	PCI_SB_AD<26>	RPC008	3	6	47	PCI_AD<26>	119 121 122 125

RC001

119	PCI_SB_AD<27>		1	2	47 5% 1/16W MF-LF 402	PCI_AD<27>	119 121 122 125

119	PCI_SB_AD<28>	RPC004	4	5	47	PCI_AD<28>	119 121 122 125
119	PCI_SB_AD<29>	RPC008	2	7	47	PCI_AD<29>	119 121 122 125
119	PCI_SB_AD<30>	RPC004	2	7	47	PCI_AD<30>	119 121 122 125
119	PCI_SB_AD<31>	RPC007	3	6	47	PCI_AD<31>	119 121 122 125
119	PCI_SB_CBE_L<0>	RPC003	3	6	47	PCI_CBE_L<0>	119 121 122
119	PCI_SB_CBE_L<1>	RPC001	1	8	47	PCI_CBE_L<1>	119 121 122
119	PCI_SB_CBE_L<2>	RPC006	1	8	47	PCI_CBE_L<2>	119 121 122
119	PCI_SB_CBE_L<3>	RPC004	3	6	47	PCI_CBE_L<3>	119 121 122
119	PCI_SB_DEVSEL_L	RPC005	3	6	47	PCI_DEVSEL_L	119 121 122
119	PCI_SB_FRAME_L	RPC005	4	5	47	PCI_FRAME_L	119 121 122
119	PCI_SB_IRDY_L	RPC005	2	7	47	PCI_IRDY_L	119 121 122
119	PCI_SB_TRDY_L	RPC005	1	8	47	PCI_TRDY_L	119 121 122
119	PCI_SB_STOP_L	RPC001	2	7	47	PCI_STOP_L	119 121 122
119	PCI_SB_PAR	RPC009	2	7	47	PCI_PAR	119 121 122

PLACE CLOSE TO SHASTA

AD<17> IS IDSEL FOR AIRPORT
AD<27> IS IDSEL FOR USB

Preliminary

www.laptop-schematics.com

PCI SERIES TERMINATION

SYNC_MASTER=FINO-MW SYNC_DATE=06/20/2005

NOTICE OF PROPRIETARY PROPERTY

THE INFORMATION CONTAINED HEREIN IS THE PROPRIETARY PROPERTY OF APPLE COMPUTER, INC. THE POSSESSOR AGREES TO THE FOLLOWING

I TO MAINTAIN THE DOCUMENT IN CONFIDENCE
II NOT TO REPRODUCE OR COPY IT
III NOT TO REVEAL OR PUBLISH IN WHOLE OR PART

APPLE COMPUTER INC.

SIZE	DRAWING NUMBER	REV.
D	051-6790	E
SCALE NONE	SHT 120 OF 154	

ELECTRICAL_CONSTRAINT_SET	NET_SPACING_TYPE	DIFFERENTIAL_PAIR
PCI_CLK_AIRPORT	CLOCKS	

PCI_CLK33M_AIRPORT 26 121

Page Notes

Power aliases required by this page:
- _PP3V3_PCI

Signal aliases required by this page:
- _PCI_CLK33M_AIRPORT (33MHz PCI clock)

BOM options provided by this page:
(NONE)

PCI Devices implemented on this page:
AD17 (Slot "A") - AirPort (0x????/0x????)

NOTE: This AirPort implementation does not support PME#.

Q85 WIRELESS CONNECTOR

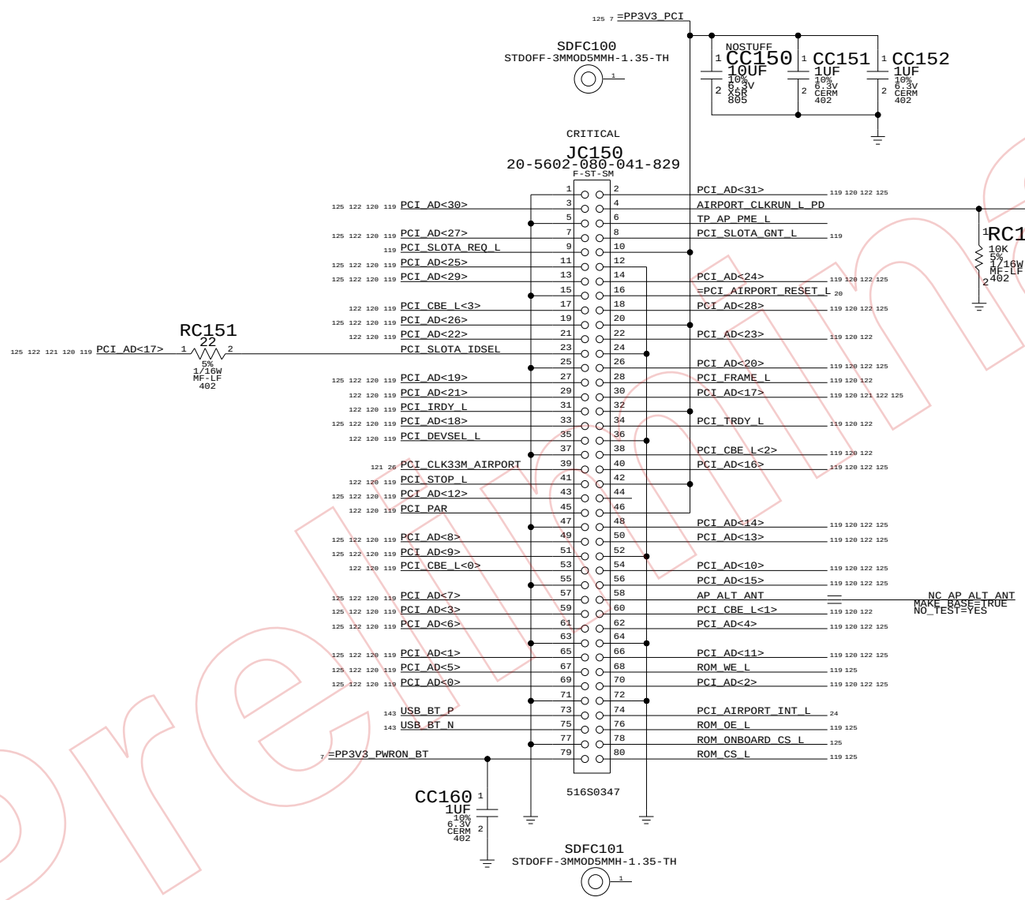

Preliminary

www.laptop-schematics.com

AIRPORT & BLUETOOTH

SYNC_MASTER=FINO-MW SYNC_DATE=06/20/2005

NOTICE OF PROPRIETARY PROPERTY

THE INFORMATION CONTAINED HEREIN IS THE PROPRIETARY PROPERTY OF APPLE COMPUTER, INC. THE POSSESSOR AGREES TO THE FOLLOWING

I TO MAINTAIN THE DOCUMENT IN CONFIDENCE

II NOT TO REPRODUCE OR COPY IT

III NOT TO REVEAL OR PUBLISH IN WHOLE OR PART

APPLE COMPUTER INC.

SIZE	DRAWING NUMBER	REV.
D	051-6790	E
SCALE NONE	SHT 121 OF 154	

ELECTRICAL_CONSTRAINT_SET	NET_SPACING_TYPE	DIFFERENTIAL_PAIR
	CLOCKS	

=PCI_CLK33M_USB2 27 122

Page Notes

Power aliases required by this page:
- _PPVIO_PCI (to 3.3V or 5V)

Signal aliases required by this page:
- _PCI_CLK33M_USB2 (33MHz PCI clock)

BOM options provided by this page:
(NONE)

PCI Devices implemented on this page:
AD27 (Slot "G") - USB2 (0x1033/0x0035)

NOTE: This USB2 implementation supports
D3cold.

Q63 APPLICATION OF POWER NET "=PPVIO_PCI_USB2" IS PP3V3_RUN

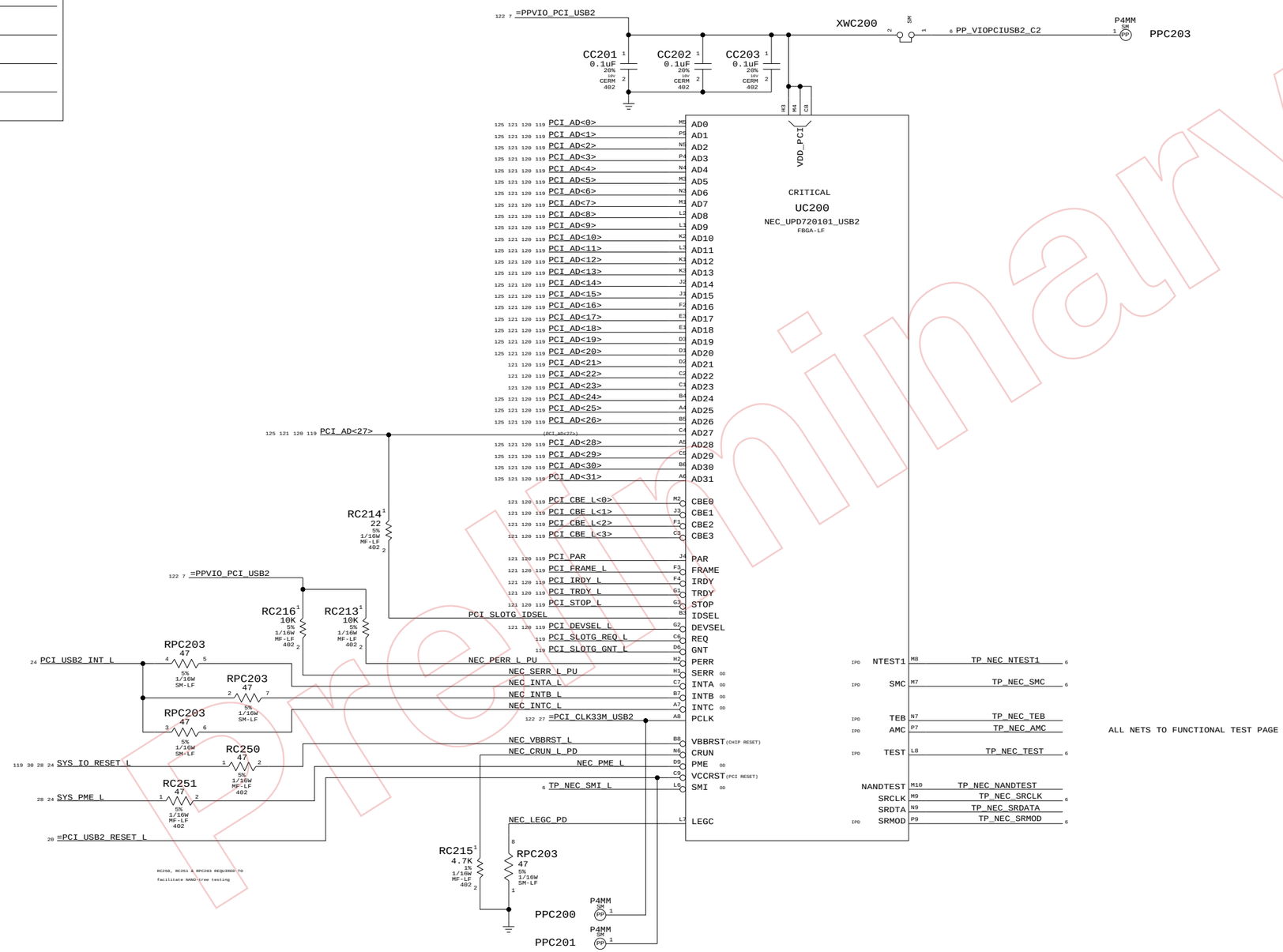

USB 2.0 PCI Interface

SYNC_MASTER=Q63 SYNC_DATE=08/01/2005

NOTICE OF PROPRIETARY PROPERTY

THE INFORMATION CONTAINED HEREIN IS THE PROPRIETARY PROPERTY OF APPLE COMPUTER, INC. THE POSSESSOR AGREES TO THE FOLLOWING

I TO MAINTAIN THE DOCUMENT IN CONFIDENCE
II NOT TO REPRODUCE OR COPY IT
III NOT TO REVEAL OR PUBLISH IN WHOLE OR PART

APPLE COMPUTER INC.

SIZE	DRAWING NUMBER	REV.
D	051-6790	E
SCALE NONE	SHT 122 OF 154	

LAST_MODIFIED=Tue Nov 1 14:55:28 2005

DRAWING

www.laptop-schematics.com

Page Notes

Power aliases required by this page:
- =PP3V3_PCI

Signal aliases required by this page:
(NONE)

BOM options provided by this page:
(NONE)

NOTE: This page does not specify a BootROM part number. Must use a TABLE_x_ITEM symbol to declare U7500 part number.

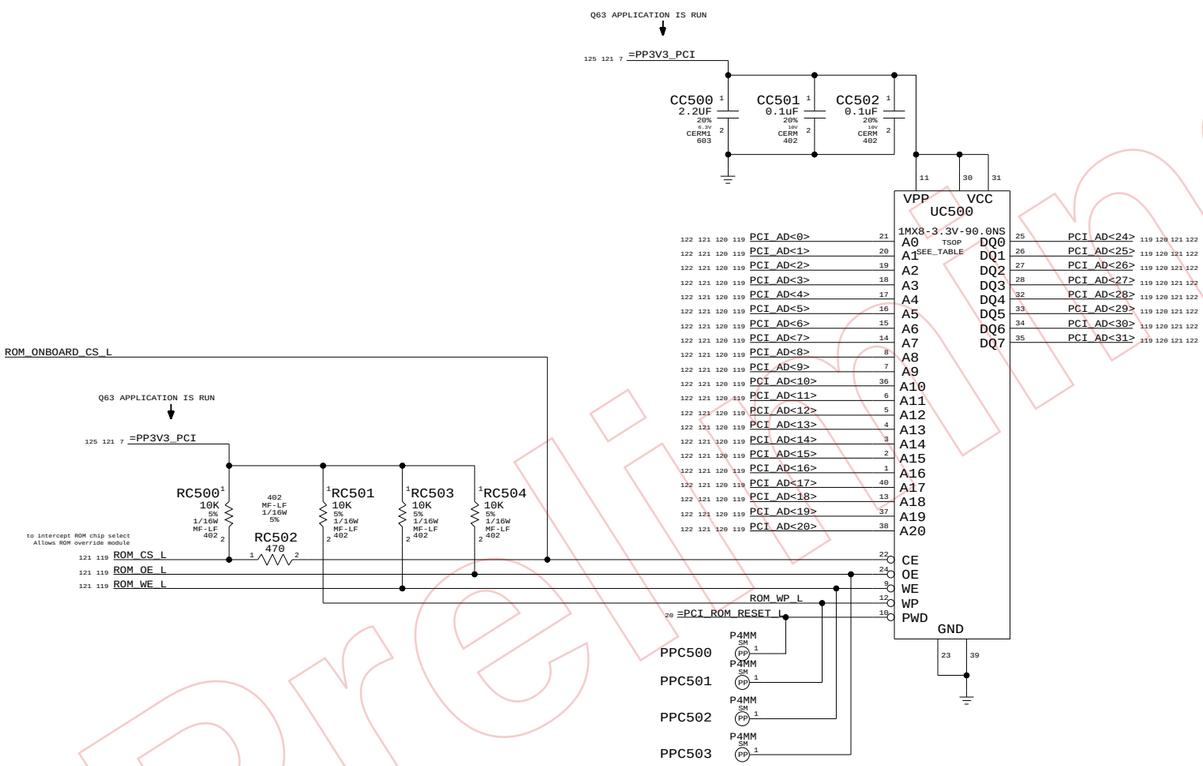

Preliminary

www.laptop-schematics.com

BootROM

SYNC_MASTER=Q63 SYNC_DATE=08/01/2005

NOTICE OF PROPRIETARY PROPERTY

THE INFORMATION CONTAINED HEREIN IS THE PROPRIETARY PROPERTY OF APPLE COMPUTER, INC. THE POSSESSOR AGREES TO THE FOLLOWING

I TO MAINTAIN THE DOCUMENT IN CONFIDENCE
II NOT TO REPRODUCE OR COPY IT
III NOT TO REVEAL OR PUBLISH IN WHOLE OR PART

APPLE COMPUTER INC.

SIZE	DRAWING NUMBER	REV.
D	051-6790	E
SCALE NONE	SHT 125	OF 154

LAST_MODIFIED=Tue Nov 1 14:55:29 2005

DRAWING
TITLE=MILDWWAN
ABBREV=DRWNG

ELECTRICAL_CONSTRAINT_SET	NET_SPACING_TYPE	NET_PHYSICAL_TYPE	DIFFERENTIAL_PAIR	
	SATA	SATA	SATA_RXD1_C	SATA_RXD_P1_C
	SATA	SATA	SATA_RXD1_C	SATA_RXD_N1_C
	SATA	SATA	SATA_TXD1	SATA_TXD_P1
	SATA	SATA	SATA_TXD1	SATA_TXD_N1
	SATA	SATA	SATA_RXD2_C	SATA_RXD_P2_C
	SATA	SATA	SATA_RXD2_C	SATA_RXD_N2_C
	SATA	SATA	SATA_TXD2	SATA_TXD_P2
	SATA	SATA	SATA_TXD2	SATA_TXD_N2
				UATA_DD<15..8>
				UATA_DD<7>
				UATA_DD<6..0>
				UATA_DA<2..0>
				UATA_CS0_L
				UATA_CS1_L
				UATA_HSTROBE
				UATA_STOP
				UATA_DMACK_L
	UATA_NETSPA			UATA_RESET_L
				UATA_DSTROBE
				UATA_DMARQ
				UATA_INTRQ
				UATA_DD_R<15..8>
				UATA_DD_R<7>
				UATA_DD_R<6..0>
				UATA_DA_R<2..0>
				UATA_CS0_L_R
				UATA_CS1_L_R
				UATA_DMACK_L_R
				UATA_HSTROBE_R
				UATA_STOP_R
				UATA_RESET_L_R

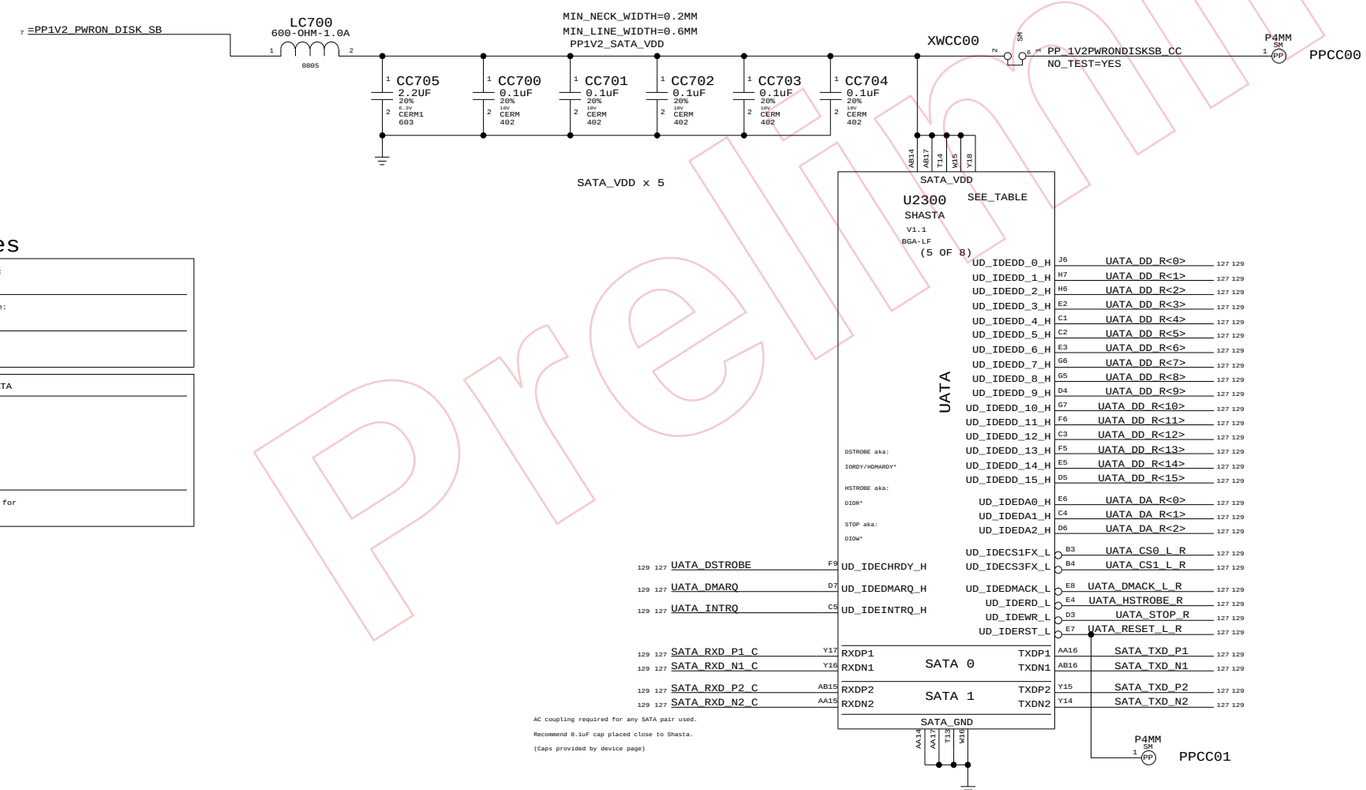

Page Notes

Power aliases required by this page:
- _PP1V2_PWRON_DISK

Signal aliases required by this page:
(NONE)

BOM options provided by this page:
(NONE)

Net Spacing Type: SATA

Line To Line:	0.38mm
Length Tolerance:	1.27mm
Primary Max Sep:	0.25mm outer
Primary Max Sep:	0.23mm inner
Secondary Max Sep:	2.54mm
Secondary Length:	12.70mm

NOTE: Target differential impedance for SATA data pairs is 100 ohms.

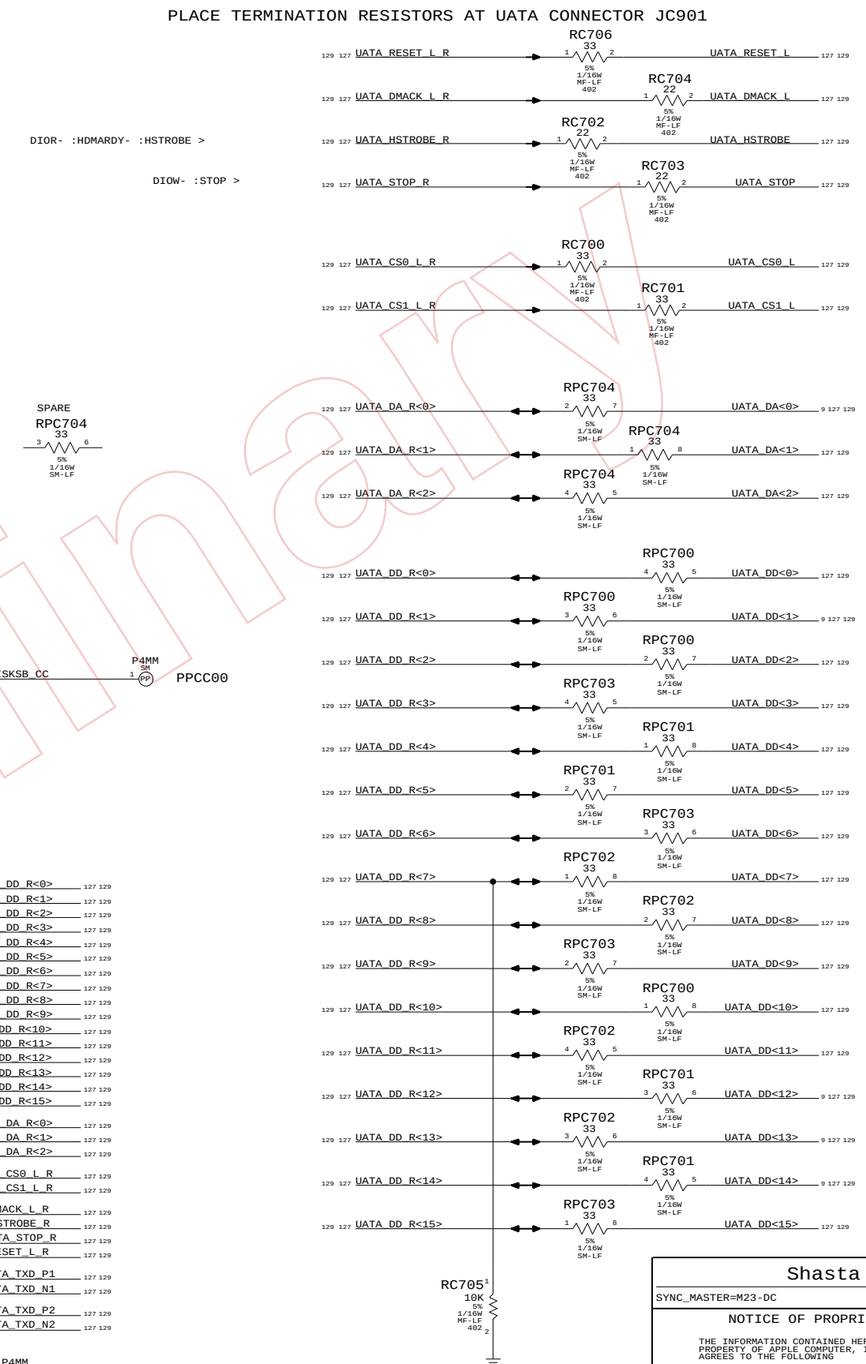

Shasta Disk

SYNC_MASTER=M23-DC SYNC_DATE=06/20/2005

NOTICE OF PROPRIETARY PROPERTY

THE INFORMATION CONTAINED HEREIN IS THE PROPRIETARY PROPERTY OF APPLE COMPUTER, INC. THE POSSESSOR AGREES TO THE FOLLOWING

I TO MAINTAIN THE DOCUMENT IN CONFIDENCE
II NOT TO REPRODUCE OR COPY IT
III NOT TO REVEAL OR PUBLISH IN WHOLE OR PART

APPLE COMPUTER INC.

SIZE	DRAWING NUMBER	REV.
D	051-6790	E
SCALE NONE	SHT 127 OF 154	

DRAWING

LAST_MODIFIED=Tue Nov 1 14:55:30 2005

Preliminary
www.laptop-schematics.com

SATA CONNECTOR

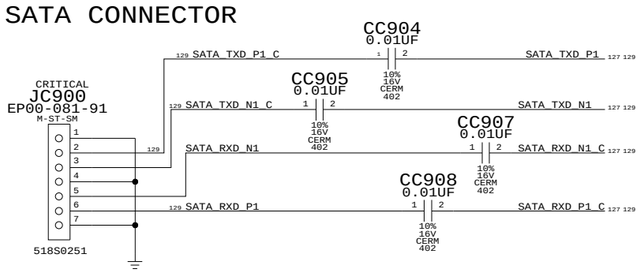

SATA PORT1 IS NOT USED IN M23/M33:NO TEST

SATA_TXD_P2	NC_SATA_TXD_P2	MAKE_BASE=TRUE
SATA_TXD_N2	NC_SATA_TXD_N2	MAKE_BASE=TRUE
SATA_RXD_N2_C	NC_SATA_RXD_N2_C	MAKE_BASE=TRUE
SATA_RXD_P2_C	NC_SATA_RXD_P2_C	MAKE_BASE=TRUE

SATA DIFF PAIR GND VIAS

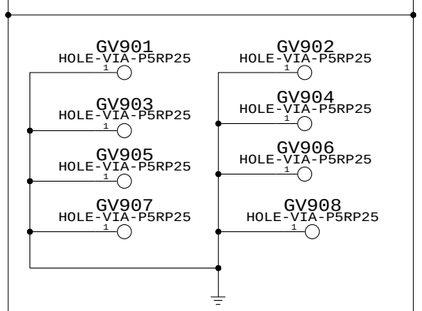

4-12-05
ADD THESE GROUND VIAS NEAR
EACH LAYER JUMP FOR THE SATA
DIFF PAIRS. ONE GND VIA PER
SIGNAL VIA, AND PLACE GND VIA
NO CLOSER THAN 0.152MM TO
SIGNAL VIA.

	ELECTRICAL_CONSTRAINT_SET	NET_PHYSICAL_TYPE	NET_SPACING_TYPE	DIFFERENTIAL_PAIR	NO_TEST
UATA_DD<15..8>	UATA_DD	UATA_NETPH	UATA_NETSPA		
UATA_DD<7>	UATA_DD7	UATA_NETPH	UATA_NETSPA		
UATA_DD<6..0>	UATA_DD	UATA_NETPH	UATA_NETSPA		
UATA_DA<2..0>	UATA_HOST	UATA_NETPH	UATA_NETSPA		
UATA_CS0_L	UATA_HOST	UATA_NETPH	UATA_NETSPA		
UATA_CS1_L	UATA_HOST	UATA_NETPH	UATA_NETSPA		
UATA_HSTROBE	UATA_HOST	UATA_NETPH	UATA_NETSPA		
UATA_STOP	UATA_HOST	UATA_NETPH	UATA_NETSPA		
UATA_DMACK_L	UATA_HOST_R	UATA_NETPH	UATA_NETSPA		
UATA_RESET_L	UATA_RESET_L	UATA_NETPH	UATA_NETSPA		
UATA_DSTROBE_R	UATA_DEV_R_C	UATA_NETPH	UATA_NETSPA		
UATA_DMARQ_R	UATA_DEV_R	UATA_NETPH	UATA_NETSPA		
UATA_INTRQ_R	UATA_DEV_R	UATA_NETPH	UATA_NETSPA		

UATA FROM RPAKS TO JC901

UATA_DD_R<15..8>		UATA_NETPH	UATA_NETSPA		
UATA_DD_R<7>		UATA_NETPH	UATA_NETSPA		
UATA_DD_R<6..0>		UATA_NETPH	UATA_NETSPA		
UATA_DA_R<2..0>		UATA_NETPH	UATA_NETSPA		
UATA_CS0_L_R		UATA_NETPH	UATA_NETSPA		
UATA_CS1_L_R		UATA_NETPH	UATA_NETSPA		
UATA_HSTROBE_R		UATA_NETPH	UATA_NETSPA		
UATA_STOP_R		UATA_NETPH	UATA_NETSPA		
UATA_DMACK_L_R		UATA_NETPH	UATA_NETSPA		
UATA_RESET_L_R		UATA_NETPH	UATA_NETSPA		
UATA_DSTROBE		UATA_NETPH	UATA_NETSPA		
UATA_DMARQ		UATA_NETPH	UATA_NETSPA		
UATA_INTRQ		UATA_NETPH	UATA_NETSPA		

UATA FROM SHASTA U2300 TO RPAKS

SATA_TXD_P1	SATA_TXD1	SATA	SATA		TRUE
SATA_TXD_N1	SATA_TXD1	SATA	SATA		TRUE
SATA_TXD_P1_C	SATA_TXD1	SATA	SATA	TX1C	TRUE
SATA_TXD_N1_C	SATA_TXD1	SATA	SATA	TX1C	TRUE
SATA_RXD_N1_C	SATA_RXD1	SATA	SATA		TRUE
SATA_RXD_P1_C	SATA_RXD1	SATA	SATA		TRUE
SATA_RXD_N1	SATA_RXD1	SATA	SATA	RX1C	TRUE
SATA_RXD_P1	SATA_RXD1	SATA	SATA	RX1C	TRUE

4-11-05: BOARD FILE HAS PHYSICAL/SPACING NAME ASSIGMENT ALREADY FOR SATA DIFF PAIRS (CAP TO SHASTA).
BUT NOT FOR THE SATA CAP TO CONNECTOR ROUTES, WHICH THE ABOVE ARE ADDED FOR THIS PURPOSE.

UATA TRACE IMPEDANCE ROUTE TO 50 OHMS

PATA CONNECTOR

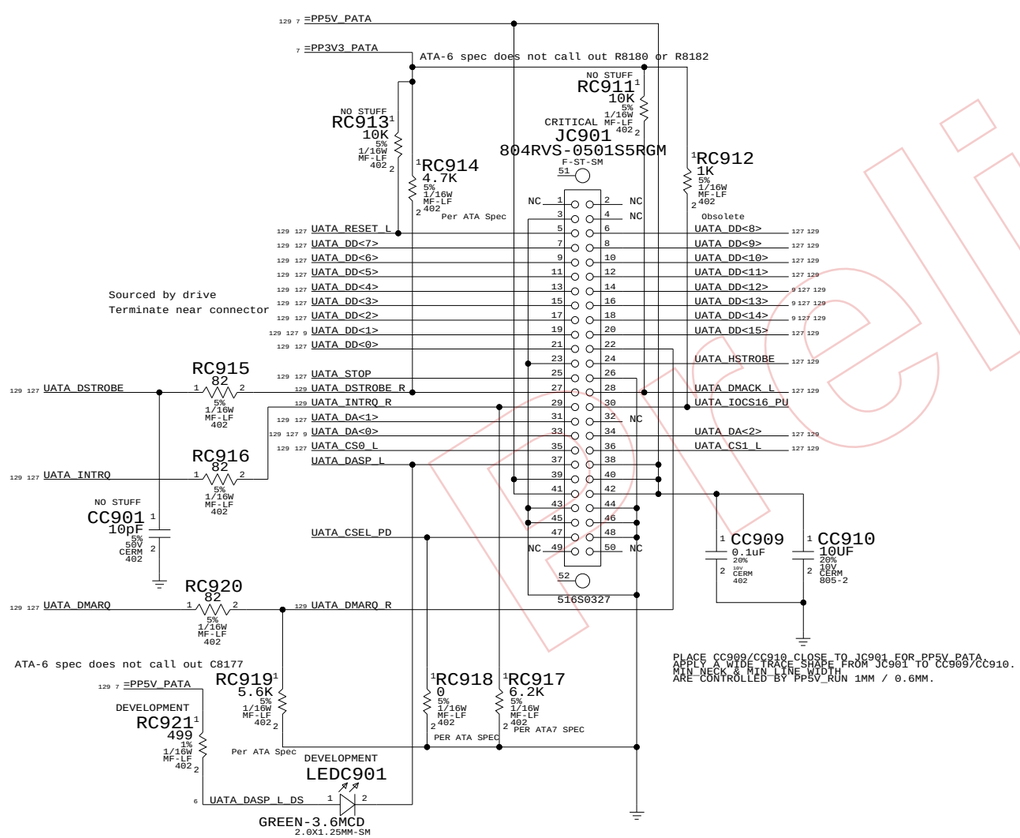

4-8-05
NOTES FOR SHARED PAGE 127
FOR M23/M33 CREATE A WIDE SHAPE
FOR PP1V2_SATA_VDD AND THEN NECK DOWN
TO THE DEFAULT VALUE WHEN NECESSARY.
THE WIDTH/NECK PROPERTIES ON PAGE 127
ARE SET BY Q63 FOR SCHEMATIC SHARING.

LC700 CHANGED TO 155S0240 (600 OHM,0.2 OHM DCR,1A)
PREVIOUS ONE WAS 155S0031 (600 OHM,0.6 OHM DCR,0.2A)
PER TOKIN AMERICA PN: N2012Z601.

4-11-05.
PP1V2_ALL REG. IS SET TO BE 1.22V TO 1.23V
AS NOTED ON THE 1.2 REG PAGE 13. THIS WILL
HELP MITIGATE THE LOSS ACROSS THE Q1306 FET
SI3326DV.

4-12-05.
UPDATED AC COUPLING CAPS FOR SATA JC900.
ADDED DECOUPLING CAPS FOR JC901 PP5V_PATA NET.

Disk Connectors

SYNC_MASTER=M23-DC SYNC_DATE=06/20/2005

NOTICE OF PROPRIETARY PROPERTY

THE INFORMATION CONTAINED HEREIN IS THE PROPRIETARY PROPERTY OF APPLE COMPUTER, INC. THE POSSESSOR AGREES TO THE FOLLOWING

I TO MAINTAIN THE DOCUMENT IN CONFIDENCE
II NOT TO REPRODUCE OR COPY IT
III NOT TO REVEAL OR PUBLISH IN WHOLE OR PART

APPLE COMPUTER INC.

SIZE	DRAWING NUMBER	REV.
D	051-6790	E
SCALE NONE	SHT 129 OF 154	

www.laptop-schematics.com

PLACE THESE SERIES TERM CLOSE TO DRIVER: SB/SHASTA

SHASTA -> VESTA

131 9	ENET_TXD_R<0>	I59	MAKE_BASE=TRUE	ENET_TXD<0>	9 131 132
131 9	ENET_TXD_R<1>	I60	MAKE_BASE=TRUE	ENET_TXD<1>	9 131 132
131 9	ENET_TXD_R<2>	I61	MAKE_BASE=TRUE	ENET_TXD<2>	9 131 132
131 9	ENET_TXD_R<3>	I62	MAKE_BASE=TRUE	ENET_TXD<3>	9 131 132
131 9	ENET_TXD_R<4>	I63	MAKE_BASE=TRUE	ENET_TXD<4>	9 131 132
131 9	ENET_TXD_R<5>	I64	MAKE_BASE=TRUE	ENET_TXD<5>	9 131 132
131 9	ENET_TXD_R<6>	I65	MAKE_BASE=TRUE	ENET_TXD<6>	9 131 132
131 9	ENET_TXD_R<7>	I66	MAKE_BASE=TRUE	ENET_TXD<7>	9 131 132
131 9	ENET_TX_EN_R	I67	MAKE_BASE=TRUE	ENET_TX_EN	9 131 132
131 9	ENET_TX_ER_R	I68	MAKE_BASE=TRUE	ENET_TX_ER	9 131 132
131	ENET_CLK125M_GTX_R	I69	MAKE_BASE=TRUE	ENET_CLK125M_GTX	131 132
131	ENET_MDIO_R		MAKE_BASE=TRUE	ENET_MDIO	131 132

PLACE THESE SERIES TERM CLOSE TO DRIVER: VESTA

VESTA -> SHASTA

132	ENET_CLK125M_GBE_REF_R	I84	MAKE_BASE=TRUE	ENET_CLK125M_GBE_REF	131
132	ENET_CLK25M_TX_R	I70	MAKE_BASE=TRUE	ENET_CLK25M_TX	131
132	ENET_CLK125M_RX_R	I71	MAKE_BASE=TRUE	ENET_CLK125M_RX	131
132 131 9	ENET_RXD_R<0>	I72	MAKE_BASE=TRUE	ENET_RXD<0>	9 131
132 131 9	ENET_RXD_R<1>	I73	MAKE_BASE=TRUE	ENET_RXD<1>	9 131
132 131 9	ENET_RXD_R<2>	I74	MAKE_BASE=TRUE	ENET_RXD<2>	9 131
132 131 9	ENET_RXD_R<3>	I75	MAKE_BASE=TRUE	ENET_RXD<3>	9 131
132 131 9	ENET_RXD_R<4>	I76	MAKE_BASE=TRUE	ENET_RXD<4>	9 131
132 131 9	ENET_RXD_R<5>	I77	MAKE_BASE=TRUE	ENET_RXD<5>	9 131
132 131 9	ENET_RXD_R<6>	I78	MAKE_BASE=TRUE	ENET_RXD<6>	9 131
132 131 9	ENET_RXD_R<7>	I79	MAKE_BASE=TRUE	ENET_RXD<7>	9 131
132 131	ENET_RX_DV_R	I80	MAKE_BASE=TRUE	ENET_RX_DV	131
132 131	ENET_RX_ER_R	I81	MAKE_BASE=TRUE	ENET_RX_ER	131
132 131	ENET_COL_R	I82	MAKE_BASE=TRUE	ENET_COL	131
132 131	ENET_CRS_R	I83	MAKE_BASE=TRUE	ENET_CRS	131

Preliminary

www.laptop-schematics.com

ENET SERIES TERM

SYNC_MASTER=FINO-DC SYNC_DATE=06/20/2005

NOTICE OF PROPRIETARY PROPERTY

THE INFORMATION CONTAINED HEREIN IS THE PROPRIETARY PROPERTY OF APPLE COMPUTER, INC. THE POSSESSOR AGREES TO THE FOLLOWING

I TO MAINTAIN THE DOCUMENT IN CONFIDENCE

II NOT TO REPRODUCE OR COPY IT

III NOT TO REVEAL OR PUBLISH IN WHOLE OR PART

APPLE COMPUTER INC.

SIZE	DRAWING NUMBER	REV.
D	051-6790	E
SCALE NONE	SHT 130 OF 154	

ELECTRICAL_CONSTRAINT_SET	NET_SPACING_TYPE	DIFFERENTIAL_PAIR		
	0.38mm SPACING		ENET_CLK25M_TX	130 131
	0.38mm SPACING		ENET_CLK125M_RX	130 131
	0.38mm SPACING		ENET_CLK125M_GBE_REF	130 131
	0.38mm SPACING		ENET_CLK125M_GTX	130 132
	0.38mm SPACING		ENET_CLK125M_GTX_R	130 131
	ENET_FW_2X		ENET_RXD_R<7..0>	9 130 132
	ENET_FW_3X		ENET_RX_DV_R	130 132
	ENET_FW_3X		ENET_RX_ER_R	130 132
	ENET_FW_2X		ENET_RXD<7..0>	9 130 131
	ENET_FW_3X		ENET_RX_DV	130 131
	ENET_FW_3X		ENET_RX_ER	130 131
	ENET_FW_2X		ENET_TXD_R<7..0>	9 130 131
	ENET_FW_3X		ENET_TX_EN_R	9 130 131
	ENET_FW_3X		ENET_TX_ER_R	9 130 131
	ENET_FW_2X		ENET_TXD<7..0>	9 130 132
	ENET_FW_3X		ENET_TX_EN	9 130 132
	ENET_FW_3X		ENET_TX_ER	9 130 132
	ENET_FW_3X		ENET_CRS_R	130 132
	ENET_FW_3X		ENET_COL_R	130 132
	ENET_FW_3X		ENET_CRS	130 131
	ENET_FW_3X		ENET_COL	130 131
	ENET_FW_3X		ENET_MDC	131 132
	ENET_FW_3X		ENET_MDIO	130 131 132
	ENET_FW_3X		ENET_MDIO_R	130 131
	ENET_FW_3X		R8405_1	131
	ENET_FW_3X		R8405_2	131
	ENET_FW_3X		R8407_2	131

Page Notes

Power aliases required by this page:
(NONE)

Signal aliases required by this page:
(NONE)

BOM options provided by this page:
(NONE)

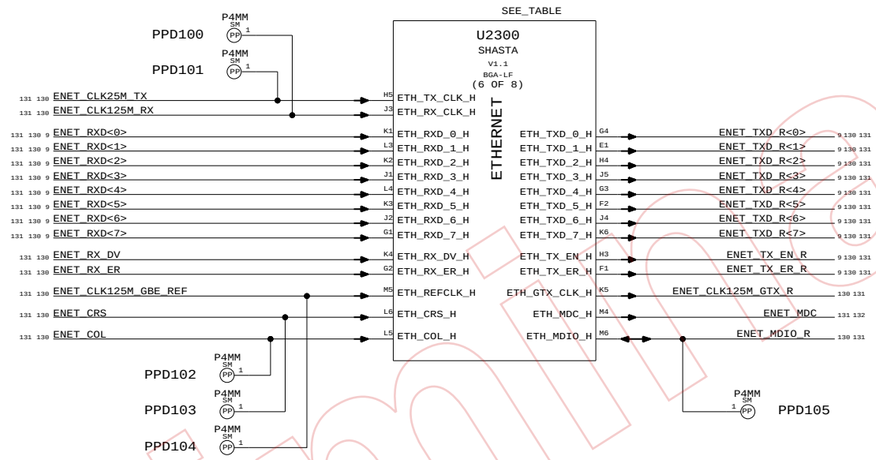

RD103 PIN 1 SHARES PIN WITH RD104 PIN 1
RD103 PIN 2 SHARES PIN WITH RD106 PIN 2

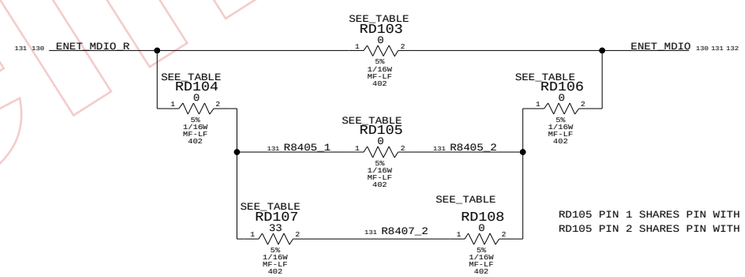

RD105 PIN 1 SHARES PIN WITH RD107 PIN 1
RD105 PIN 2 SHARES PIN WITH RD108 PIN 2

PART NUMBER	QTY	DESCRIPTION	REFERENCE DES	CRITICAL	BOM OPTION
116S0004	1	RES,0-OHM,402,5%	RD103		ENET_MDIO_DELAY_0
116S0004	3	RES,0-OHM,402,5%	RD104,RD105,RD106		ENET_MDIO_DELAY_2NS
116S0004	3	RES,0-OHM,402,5%	RD104,RD108,RD106		ENET_MDIO_DELAY_4NS
116S0030	1	RES,33-OHM,402,5%	RD107		ENET_MDIO_DELAY_4NS

*

Shasta Ethernet

SYNC_MASTER=Q63 SYNC_DATE=08/01/2005

NOTICE OF PROPRIETARY PROPERTY

THE INFORMATION CONTAINED HEREIN IS THE PROPRIETARY PROPERTY OF APPLE COMPUTER, INC. THE POSSESSOR AGREES TO THE FOLLOWING

I TO MAINTAIN THE DOCUMENT IN CONFIDENCE
II NOT TO REPRODUCE OR COPY IT
III NOT TO REVEAL OR PUBLISH IN WHOLE OR PART

APPLE COMPUTER INC.

SIZE	DRAWING NUMBER	REV.
D	051-6790	E
SCALE NONE	SHT 131 OF 154	

LAST_MODIFIED=Tue Nov 1 13:56:12 2005

DRAWING

TITLE=KILOWARA
ABBREV=KRAWING

Preliminary
www.laptop-schematics.com

ELECTRICAL_CONSTRAINT_SET	NET_SPACING_TYPE	DIFFERENTIAL_PAIR	
	0.38mm SPACING		ENET_CLK125M_GBE_REF_R 130 132
	0.38mm SPACING		ENET_CLK125M_RX_R 130 132
	0.38mm SPACING		ENET_CLK25M_TX_R 130 132
	ENET	ENET_MDI0	ENET_MDI_P<0> 132 136
	ENET	ENET_MDI0	ENET_MDI_N<0> 132 136
	ENET	ENET_MDI1	ENET_MDI_P<1> 132 136
	ENET	ENET_MDI1	ENET_MDI_N<1> 132 136
	ENET	ENET_MDI2	ENET_MDI_P<2> 132 136
	ENET	ENET_MDI2	ENET_MDI_N<2> 132 136
	ENET	ENET_MDI3	ENET_MDI_P<3> 132 136
	ENET	ENET_MDI3	ENET_MDI_N<3> 132 136
	0.38mm SPACING		VESTA_CLK25M_XTALI 132
	0.38mm SPACING		VESTA_CLK25M_XTALO 132
	0.38mm SPACING		VESTA_CLK25M_XTALO_R 132

Page Notes

Power aliases required by this page:
- =PP3V3_ENET
- =PP2V5_ENETFW
- =PP1V2_ENETFW

Signal aliases required by this page:
(NONE)

BOM options provided by this page:
(NONE)

Net Spacing Type: ENET

Line To Line: 0.38mm
Length Tolerance: 1.27mm
Primary Max Sep: 0.13mm
Secondary Max Sep: 2.54mm
Secondary Length: 12.70mm

NOTE: Target differential impedance for ENET data pairs is 100 ohms.

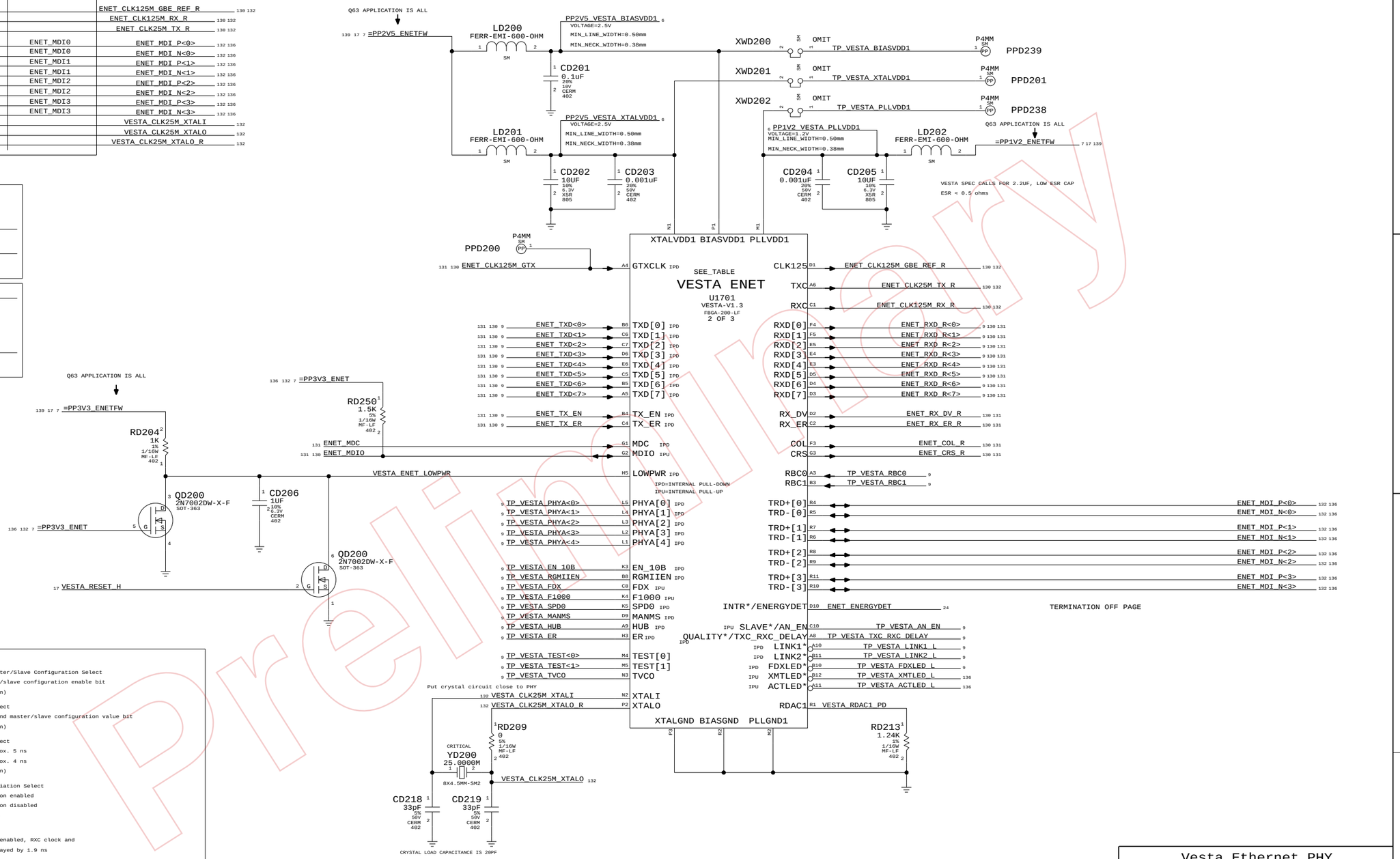

Vesta Config Straps:

PHYA<4..0> - PHY Address Select
(Internal Pull-downs)

EN_10B - TBI Interface Select
1 - TBI/RTBI Mode
0 - GMII/RGMII Mode
(Internal Pull-down)

RGMIIEN - RGMII Enable
1 - RGMII/RTBI Mode
0 - GMII/TBI Mode
(Internal Pull-down)

FDX - Full-Duplex Select
Sets manual duplex mode bit
(Internal Pull-up)

F1000 - Speed Select
See table below
(Internal Pull-up)

SPD0 - Speed Select
See table below
(Internal Pull-down)

MANMS - Manual Master/Slave Configuration Select
Sets manual master/slave configuration enable bit
(Internal Pull-down)

HUB - Repeater Select
Sets Hub/DTE bit and master/slave configuration value bit
(Internal Pull-down)

ER - Edge Rate Select
1 - Rise time approx. 5 ns
0 - Rise time approx. 4 ns
(Internal Pull-down)

AN_EN - Auto-Negotiation Select
1 - Auto-negotiation enabled
0 - Auto-negotiation disabled
(Internal Pull-up)

TXC_RXC_DELAY
1 - If RGMII Mode enabled, RXC clock and GTXCLK are delayed by 1.9 ns
0 - No clock delay
(Internal Pull-down)

AN_EN	F1000	SPD0	Description
0	0	0	Force 10BASE-T
0	0	1	Force 100BASE-TX
0	1	X	Force 1000BASE-T (test use only)
1	0	0	Auto-negotiate advertise 10BASE-T
1	0	1	Auto-negotiate advertise 10/100BASE-TX
1	1	0	Auto-negotiate advertise 10/100/1000BASE-T
1	1	1	Auto-negotiate advertise 1000BASE-T

Vesta Ethernet PHY

SYNC_MASTER=Q63 SYNC_DATE=08/01/2005

NOTICE OF PROPRIETARY PROPERTY

THE INFORMATION CONTAINED HEREIN IS THE PROPRIETARY PROPERTY OF APPLE COMPUTER, INC. THE POSSESSOR AGREES TO THE FOLLOWING

I TO MAINTAIN THE DOCUMENT IN CONFIDENCE

II NOT TO REPRODUCE OR COPY IT

III NOT TO REVEAL OR PUBLISH IN WHOLE OR PART

APPLE COMPUTER INC.

SIZE	DRAWING NUMBER	REV.
D	051-6790	E
SCALE NONE	SHT 132 OF 154	

LAST_MODIFIED=Tue Nov 1 14:55:32 2005

DRAWING

Preliminary
www.laptop-schematics.com

EXTRA CONSTRAINTS TO SUPPLEMENT THE THE MISSING NET PHYSICAL FROM EARLIER PAGE

PART#	QTY	DESCRIPTION	REFERENCE DESIGNATOR(S)	CRITICAL	BOM OPTION
514-0253	1	CON,RJ-45 7 DEGRESS	JD600	CRITICAL	17_INCH_LCD
514-0254	1	CON,RJ-45 7 DEGRESS	JD600	CRITICAL	20_INCH_LCD

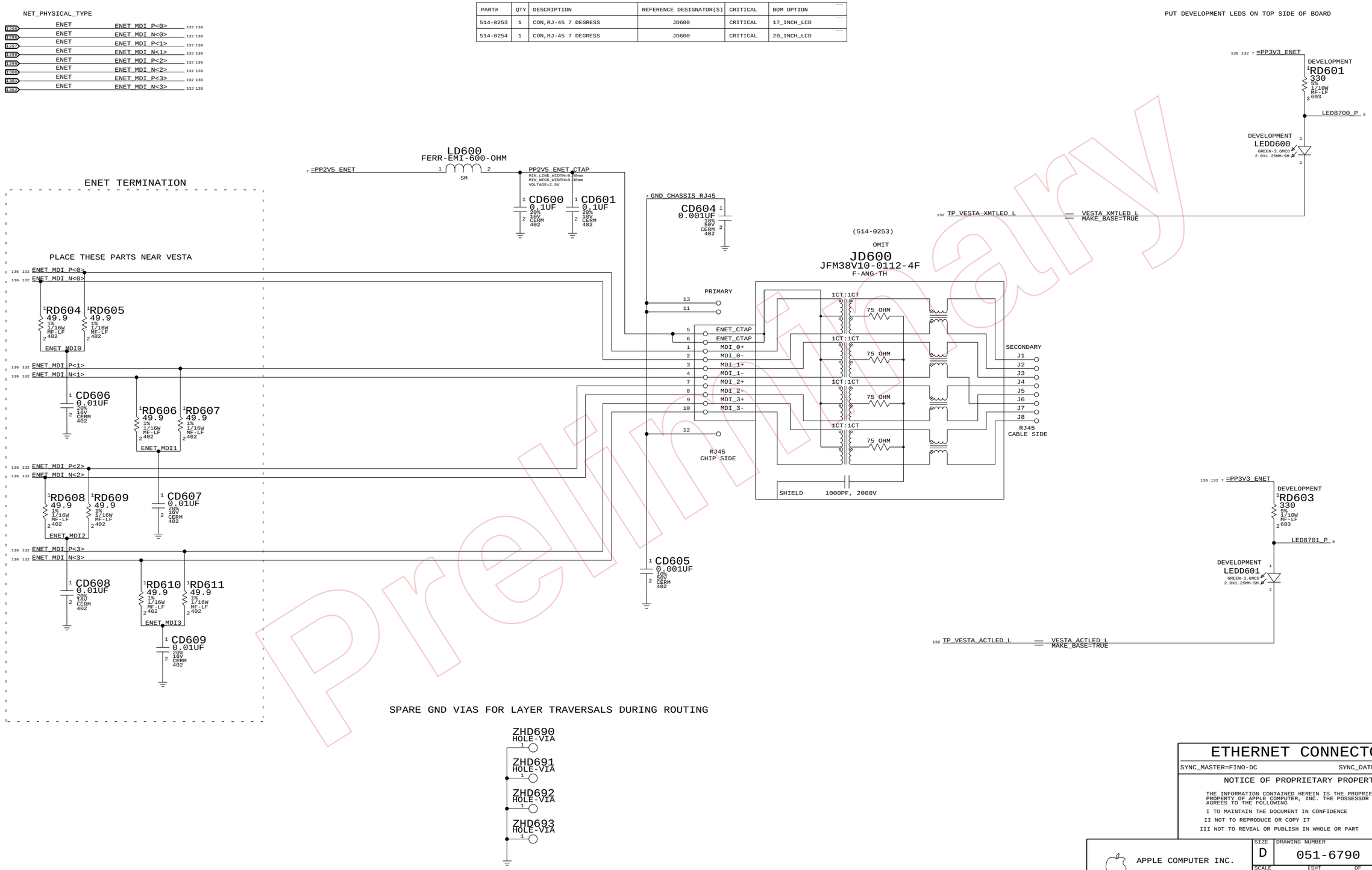

ETHERNET CONNECTOR

SYNC_MASTER=FINO-DC SYNC_DATE=06/20/2005

NOTICE OF PROPRIETARY PROPERTY

THE INFORMATION CONTAINED HEREIN IS THE PROPRIETARY PROPERTY OF APPLE COMPUTER, INC. THE POSSESSOR AGREES TO THE FOLLOWING

I TO MAINTAIN THE DOCUMENT IN CONFIDENCE

II NOT TO REPRODUCE OR COPY IT

III NOT TO REVEAL OR PUBLISH IN WHOLE OR PART

APPLE COMPUTER INC.

SIZE	DRAWING NUMBER	REV.
D	051-6790	E
SCALE NONE	SHT 136 OF 154	

Preliminary

www.laptop-schematics.com

ELECTRICAL_CONSTRAINT_SET	NET_SPACING_TYPE	DIFFERENTIAL_PAIR		
	ENET_FW_2X		FW_DATA<7..0>	138 139
	ENET_FW_3X		FW_CTL_S<1..0>	138 139
	ENET_FW_3X		FW_CTL<1..0>	138 139
	ENET_FW_2X		FW_DATA_R<7..0>	139
	ENET_FW_3X		FW_CTL_R<1..0>	139
	ENET_FW_3X		FW_LPS	138 139
	ENET_FW_3X		FW_LREQ	138 139
	ENET_FW_3X		FW_PINT	138 139
	0.38mm_SPACING		FW_CLK98M_LCLK	138 139
	0.38mm_SPACING		FW_CLK98M_PCLK	138 139
	0.38mm_SPACING		FW_CLK98M_LCLK_R	138

Page Notes

Power aliases required by this page:
- _PP2V5_PWRON_SB

Signal aliases required by this page:
(NONE)

BOM options provided by this page:
(NONE)

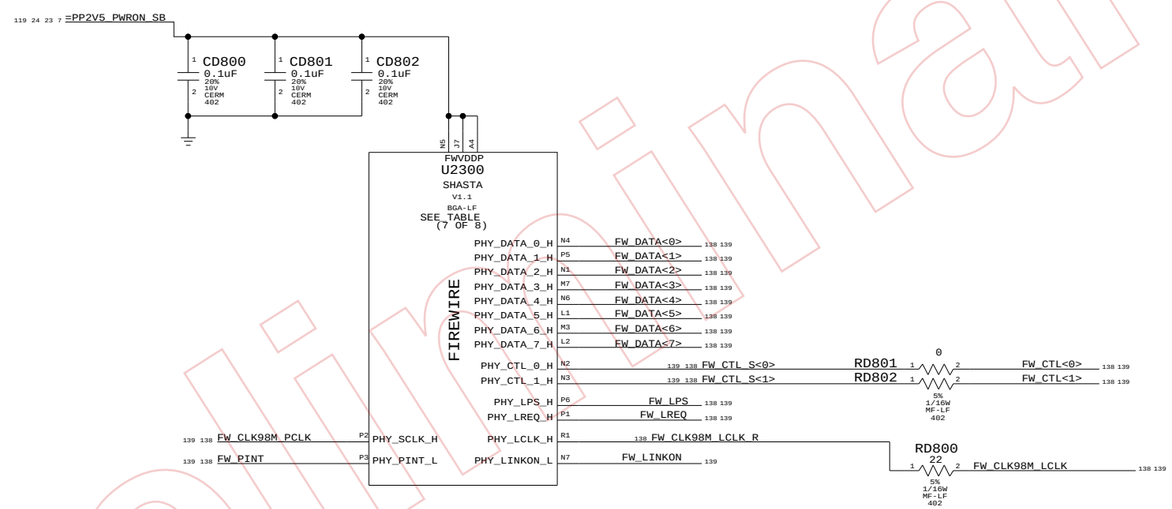

Preliminary

www.laptop-schematics.com

Shasta FireWire

SYNC_MASTER=Q63 SYNC_DATE=08/01/2005

NOTICE OF PROPRIETARY PROPERTY

THE INFORMATION CONTAINED HEREIN IS THE PROPRIETARY PROPERTY OF APPLE COMPUTER, INC. THE POSSESSOR AGREES TO THE FOLLOWING

I TO MAINTAIN THE DOCUMENT IN CONFIDENCE

II NOT TO REPRODUCE OR COPY IT

III NOT TO REVEAL OR PUBLISH IN WHOLE OR PART

APPLE COMPUTER INC.

SIZE	DRAWING NUMBER	REV.
D	051-6790	E
SCALE NONE	SHT 138 OF 154	

LAST_MODIFIED=Tue Nov 1 14:55:34 2005

DRAWING

TITLE=K11ANMAA

ABBREV=SHAACAG

ELECTRICAL_CONSTRAINT_SET	NET_PHYSICAL_TYPE	NET_SPACING_TYPE	DIFFERENTIAL_PAIR	
(PROVIDED BY LINK PAGE)		0.38mm SPACING		FW_CLK98M_PCLK_R 139
	FW	FW	FW_TPA0	FW_TPA_P<0> 139 140
	FW	FW	FW_TPA0	FW_TPA_N<0> 139 140
	FW	FW	FW_TPB0	FW_TPB_P<0> 139 140
	FW	FW	FW_TPB0	FW_TPB_N<0> 139 140
	FW	FW	FW_TPA1	FW_TPA_P<1> 139 140
	FW	FW	FW_TPA1	FW_TPA_N<1> 139 140
	FW	FW	FW_TPB1	FW_TPB_P<1> 139 140
	FW	FW	FW_TPB1	FW_TPB_N<1> 139 140
ETHERNET SPACING TO ROUTE ON LAYER 8	FW	FW	FW_TPA2	FW_TPA_P<2> 139 140
	FW	FW	FW_TPA2	FW_TPA_N<2> 139 140
	FW	FW	FW_TPB2	FW_TPB_P<2> 139 140
	FW	FW	FW_TPB2	FW_TPB_N<2> 139 140
		0.38mm SPACING		VESTA_CLK24M_XTALI 139
		0.38mm SPACING		VESTA_CLK24M_XTALO 139
		0.38mm SPACING		VESTA_CLK24M_XTALO_R 139
	FW_CTL			FW_CTL_S<1..0> 138
	FW_CTL			FW_CTL<1..0> 138 139
	FW_CTL			FW_CTL_R<1..0> 138 139

Page Notes

Power aliases required by this page:
- =PPFW_PHY
- =PP3V3_FW
- =PP3V3_ENETFW
- =PP2V5_ENETFW
- =PP1V2_ENETFW

Signal aliases required by this page:
(NONE)

BOM options provided by this page:
- VESTA_DS_ONLY_EN0
  If stuffed, adds external pull-up to counter internal pull-down in Vesta.
  See straps table for more information.
- VESTA_PWR_CLASS_0
  If stuffed, adds external pull-down to counter internal pull-up in Vesta.
  See straps table for more information.

Net Spacing Type: FW

NOTE: Target differential impedance for FW data pairs is 110 ohms.

VESTA CONFIG STRAPS:

FW_PWR_CLASS_MSB - FIREWIRE POWER CLASS
1 - Sets Power Class to 0x4
0 - Sets Power Class to 0x0
(Internal Pull-up)

FW_DS_ONLY_P0 - PORT 0 DATA/STROBE
1 - Port 0 Data/Strobe mode only
0 - Port 0 Bilingual mode
(Internal Pull-down)

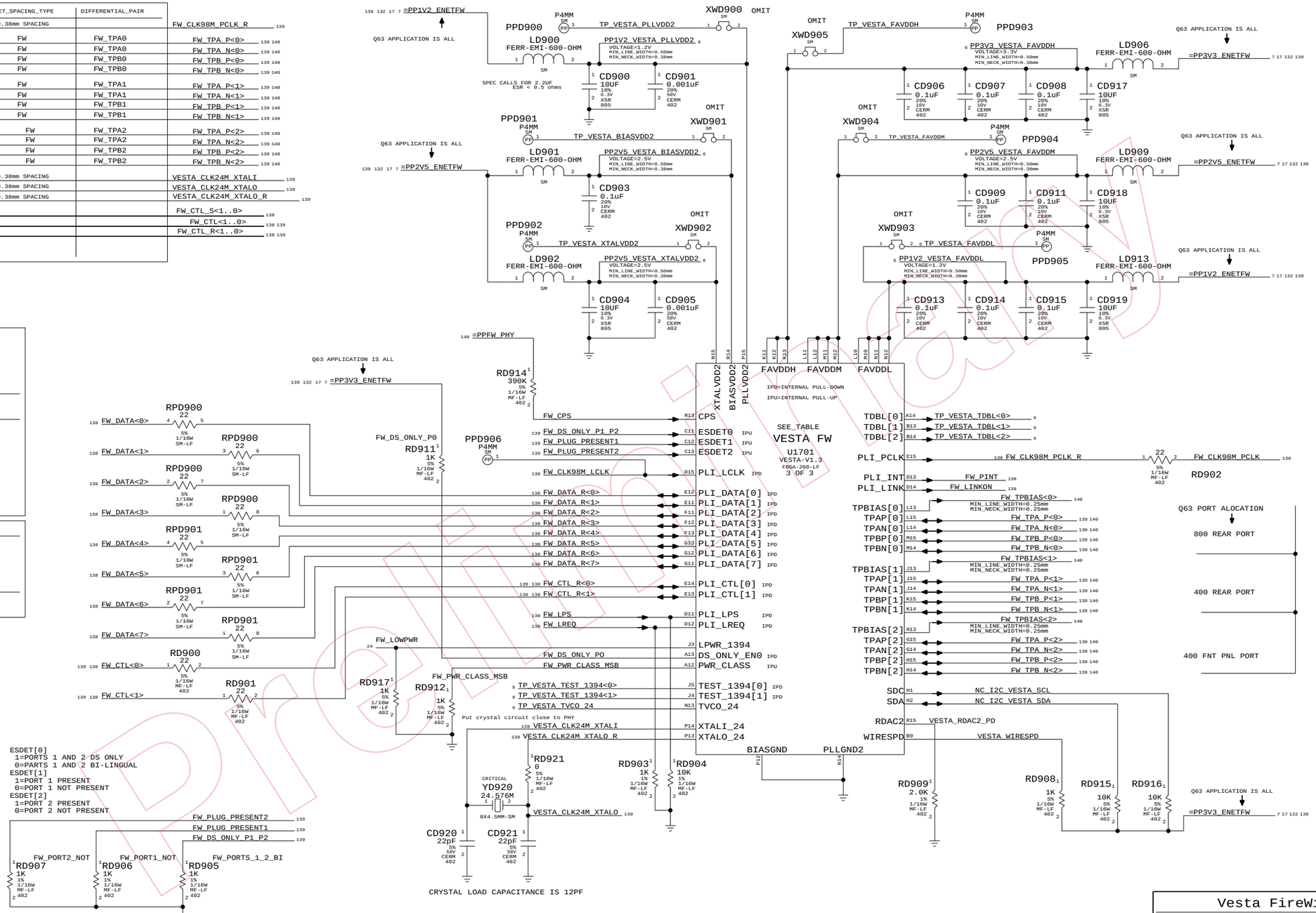

Vesta FireWire PHY	
SYNC_MASTER=Q63	SYNC_DATE=08/01/2005

NOTICE OF PROPRIETARY PROPERTY

THE INFORMATION CONTAINED HEREIN IS THE PROPRIETARY PROPERTY OF APPLE COMPUTER, INC. THE POSSESSOR AGREES TO THE FOLLOWING

I TO MAINTAIN THE DOCUMENT IN CONFIDENCE
II NOT TO REPRODUCE OR COPY IT
III NOT TO REVEAL OR PUBLISH IN WHOLE OR PART

APPLE COMPUTER INC.

SIZE	DRAWING NUMBER	REV.
D	051-6790	E
SCALE NONE	SHT 139 OF 154	

LAST_MODIFIED=Tue Nov 1 14:55:35 2005
DRAWING
TITLE=K21.D0MAA
ABBREV=D0MAA2A6

www.laptop-schematics.com

NET_TYPE	SPACING	PHYSICAL	DIFFERENTIAL_PAIR	
T401	FW	FW	FW_TPA0_FL	FW_PORT0_TPA_P_FL
T400	FW	FW	FW_TPA0_FL	FW_PORT0_TPA_N_FL
T402	FW	FW	FW_TPB0_FL	FW_PORT0_TPB_P_FL
T403	FW	FW	FW_TPB0_FL	FW_PORT0_TPB_N_FL
T404	FW	FW	FW_TPA1_FL	FW_PORT1_TPA_P_FL
T405	FW	FW	FW_TPA1_FL	FW_PORT1_TPA_N_FL
T407	FW	FW	FW_TPB1_FL	FW_PORT1_TPB_P_FL
T406	FW	FW	FW_TPB1_FL	FW_PORT1_TPB_N_FL

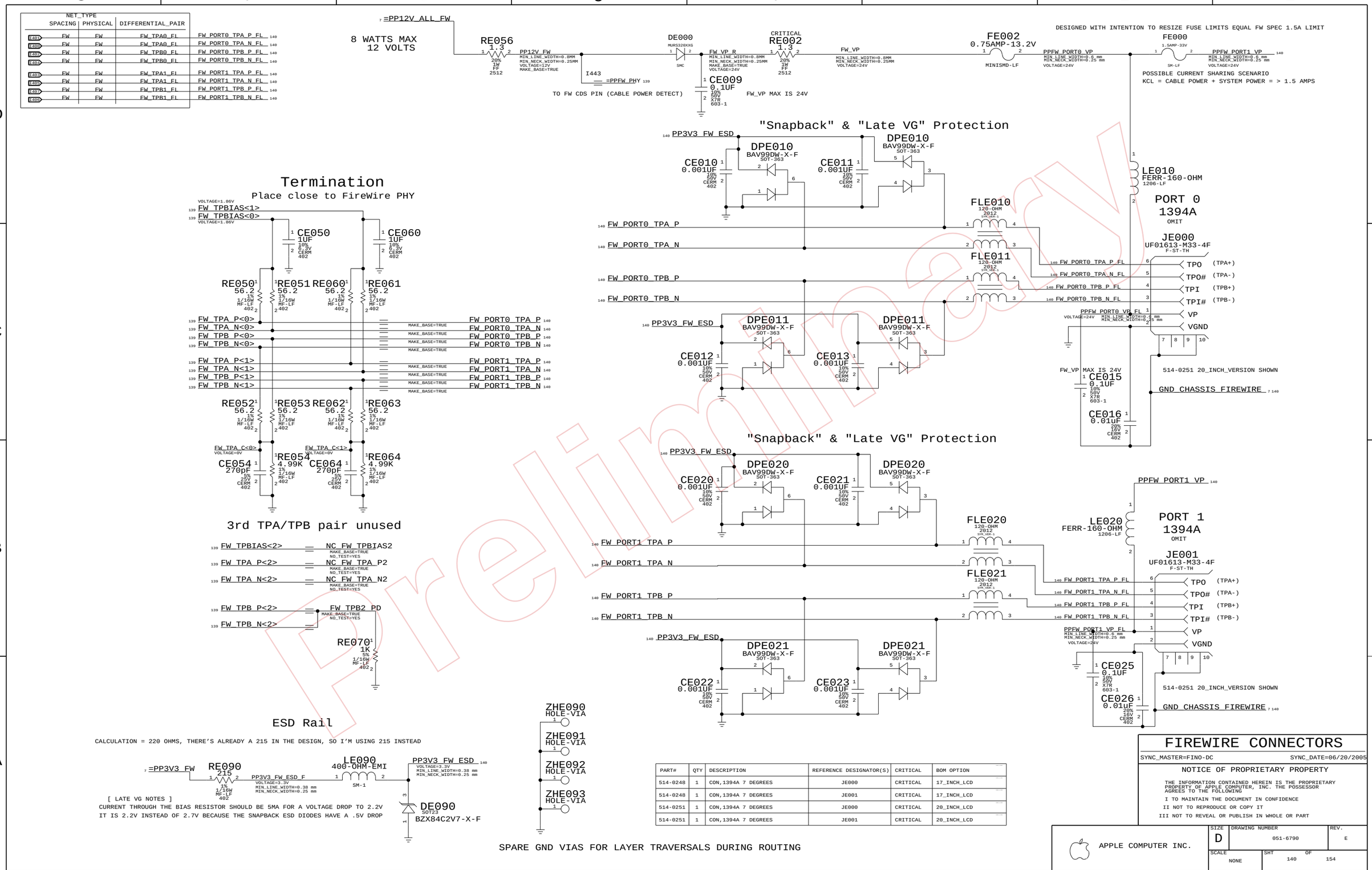

PART#	QTY	DESCRIPTION	REFERENCE DESIGNATOR(S)	CRITICAL	BOM OPTION
514-0248	1	CON,1394A 7 DEGREES	JE000	CRITICAL	17_INCH_LCD
514-0248	1	CON,1394A 7 DEGREES	JE001	CRITICAL	17_INCH_LCD
514-0251	1	CON,1394A 7 DEGREES	JE000	CRITICAL	20_INCH_LCD
514-0251	1	CON,1394A 7 DEGREES	JE001	CRITICAL	20_INCH_LCD

FIREWIRE CONNECTORS

SYNC_MASTER=FINO-DC SYNC_DATE=06/20/2005

NOTICE OF PROPRIETARY PROPERTY

THE INFORMATION CONTAINED HEREIN IS THE PROPRIETARY PROPERTY OF APPLE COMPUTER, INC. THE POSSESSOR AGREES TO THE FOLLOWING

I TO MAINTAIN THE DOCUMENT IN CONFIDENCE

II NOT TO REPRODUCE OR COPY IT

III NOT TO REVEAL OR PUBLISH IN WHOLE OR PART

APPLE COMPUTER INC.

SIZE	DRAWING NUMBER	REV.
D	051-6790	E
SCALE NONE	SHT 140 OF 154	

Preliminary

www.laptop-schematics.com

ELECTRICAL_CONSTRAINT_SET	NET_SPACING_TYPE	NET_PHYSICAL_TYPE	DIFFERENTIAL_PAIR	
	USB2	USB2_S	USB2_0	USB2_P<0> 142 143
	USB2	USB2_S	USB2_0	USB2_N<0> 142 143
	USB2	USB2_S	USB2_1	USB2_P<1> 142 143
	USB2	USB2_S	USB2_1	USB2_N<1> 142 143
	USB2	USB2_S	USB2_2	USB2_P<2> 142 143
	USB2	USB2_S	USB2_2	USB2_N<2> 142 143
	USB2	USB2	USB2_3	USB2_P<3> 142 143
	USB2	USB2	USB2_3	USB2_N<3> 142 143
	USB2	USB2	USB2_4	USB2_P<4> 142 143
	USB2	USB2	USB2_4	USB2_N<4> 142 143
	0.38mm SPACING			NEC_CLK30M_XT1 142
	0.38mm SPACING			NEC_CLK30M_XT2 142
	0.38mm SPACING			NEC_CLK30M_XT2_R 142

Q63 USB PORT ALLOCATION
REAR USB (PORT #0)
FRONT PANEL USB (PORT #1)
REAR USB (PORT #2)
REAR USB (PORT #3)

Page Notes

Power aliases required by this page:
- =PP3V3_PWRON_USB

Signal aliases required by this page:
(NONE)

BOM options provided by this page:
(NONE)

Net Spacing Type: USB2

Line To Line: 0.50mm
Length Tolerance: 1.27mm
Primary Max Sep: 0.19mm
Secondary Max Sep: 2.54mm
Secondary Length: 12.70mm

NOTE: Target differential impedance for USB2 data pairs is 90 ohms.

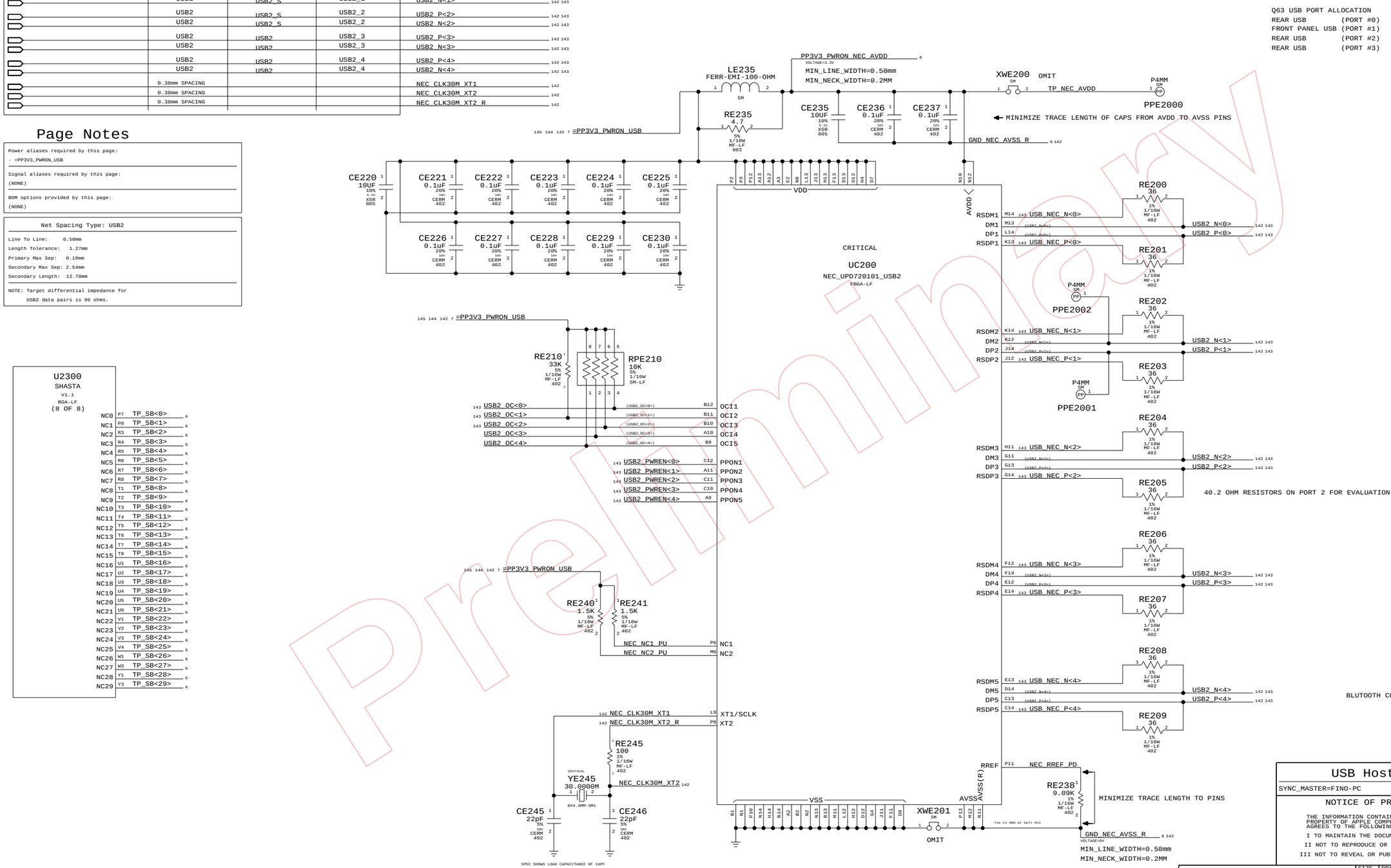

USB Host Interfaces

SYNC_MASTER=FINO-PC SYNC_DATE=07/05/2005

NOTICE OF PROPRIETARY PROPERTY

THE INFORMATION CONTAINED HEREIN IS THE PROPRIETARY PROPERTY OF APPLE COMPUTER, INC. THE POSSESSOR AGREES TO THE FOLLOWING

I TO MAINTAIN THE DOCUMENT IN CONFIDENCE
II NOT TO REPRODUCE OR COPY IT
III NOT TO REVEAL OR PUBLISH IN WHOLE OR PART

APPLE COMPUTER INC.

SIZE	DRAWING NUMBER	REV.
D	051-6790	E
SCALE NONE	SHT 142 OF 154	

LAST_MODIFIED=Tue Nov 1 14:55:37 2005

DRAWING
TITLE=KILOWHRA
ABBREV=DRAWING

Preliminary
www.laptop-schematics.com

Page Notes

Power aliases required by this page:
- _PP5V_PWRON_USB
- _PP5V_PWRON_UDASH
- _PP3V3_PWRON_UDASH
- _PP3V3_PWRON_BT

Signal aliases required by this page:
(NONE)

NOTE: This page is expected to contain the necessary aliases to map the USB pairs to their appropriate destinations and/or to properly terminate unused signals.

BOM options provided by this page:
(NONE)

NOTE: USB pairs are NOT constrained on this page. It is assumed that the USB Host Controller page will provide the appropriate constraints to apply to entire USB D+/D- XNets.

neoBorg Implementation

NOTE: This design does not provide power control on USB ports 2-4. Rename USB controller outputs to indicate single-pin connections.

142 USB2_PWREN<0> — TP_USB2_PWREN<0> 6 MAKE_BASE=TRUE
142 USB2_PWREN<1> — TP_USB2_PWREN<1> 6 MAKE_BASE=TRUE
142 USB2_PWREN<2> — TP_USB2_PWREN<2> 6 MAKE_BASE=TRUE
142 USB2_PWREN<3> — TP_USB2_PWREN<3> 6 MAKE_BASE=TRUE
142 USB2_PWREN<4> — TP_USB2_PWREN<4> 6 MAKE_BASE=TRUE

External USB Ports

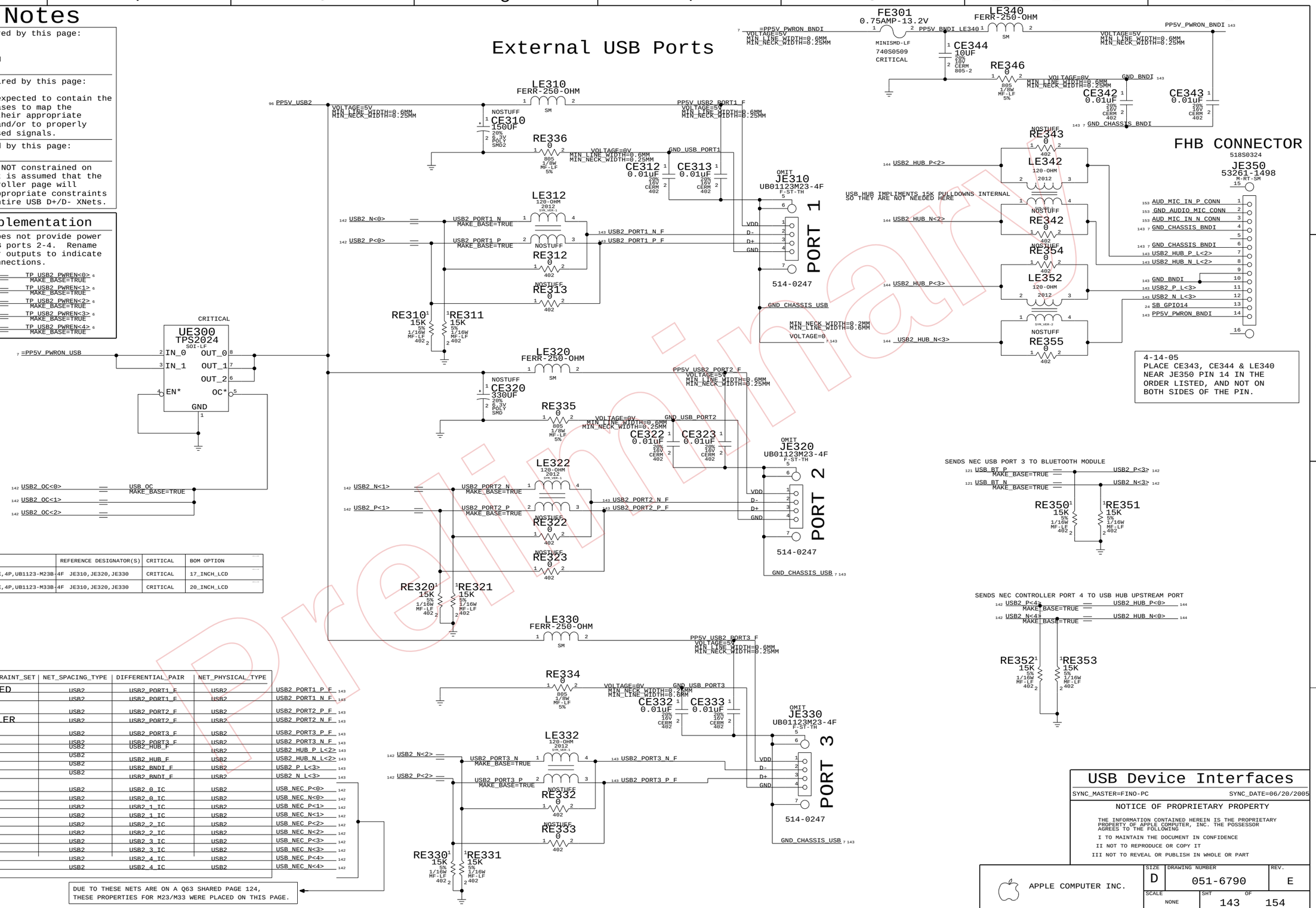

PART#	QTY	DESCRIPTION	REFERENCE DESIGNATOR(S)	CRITICAL	BOM OPTION
514-0294	3	USB RECEPTACLE,4P,UB1123-M23B-4F	JE310,JE320,JE330	CRITICAL	17_INCH_LCD
514-0295	3	USB RECEPTACLE,4P,UB1123-M33B-4F	JE310,JE320,JE330	CRITICAL	20_INCH_LCD

	ELECTRICAL_CONSTRAINT_SET	NET_SPACING_TYPE	DIFFERENTIAL_PAIR	NET_PHYSICAL_TYPE	
I602	PROVIDED BY USB CONTROLLER	USB2	USB2_PORT1_F	USB2	USB2_PORT1_P_F 143
I603		USB2	USB2_PORT1_F	USB2	USB2_PORT1_N_F 143
I604		USB2	USB2_PORT2_F	USB2	USB2_PORT2_P_F 143
I605		USB2	USB2_PORT2_F	USB2	USB2_PORT2_N_F 143
I606		USB2	USB2_PORT3_F	USB2	USB2_PORT3_P_F 143
I607		USB2	USB2_PORT3_F	USB2	USB2_PORT3_N_F 143
I608		USB2	USB2_HUB_F	USB2	USB2_HUB_P_L<2> 143
I609		USB2	USB2_HUB_F	USB2	USB2_HUB_N_L<2> 143
I610		USB2	USB2_BNDI_F	USB2	USB2_P_L<3> 143
I611		USB2	USB2_BNDI_F	USB2	USB2_N_L<3> 143
I614		USB2	USB2_0_IC	USB2	USB_NEC_P<0> 142
I615		USB2	USB2_0_IC	USB2	USB_NEC_N<0> 142
I616		USB2	USB2_1_IC	USB2	USB_NEC_P<1> 142
I617		USB2	USB2_1_IC	USB2	USB_NEC_N<1> 142
I620		USB2	USB2_2_IC	USB2	USB_NEC_P<2> 142
I621		USB2	USB2_2_IC	USB2	USB_NEC_N<2> 142
I622		USB2	USB2_3_IC	USB2	USB_NEC_P<3> 142
I623		USB2	USB2_3_IC	USB2	USB_NEC_N<3> 142
I624		USB2	USB2_4_IC	USB2	USB_NEC_P<4> 142
I625		USB2	USB2_4_IC	USB2	USB_NEC_N<4> 142

DUE TO THESE NETS ARE ON A Q63 SHARED PAGE 124,
THESE PROPERTIES FOR M23/M33 WERE PLACED ON THIS PAGE.

USB Device Interfaces

SYNC_MASTER=FINO-PC SYNC_DATE=06/20/2005

NOTICE OF PROPRIETARY PROPERTY

THE INFORMATION CONTAINED HEREIN IS THE PROPRIETARY PROPERTY OF APPLE COMPUTER, INC. THE POSSESSOR AGREES TO THE FOLLOWING

I TO MAINTAIN THE DOCUMENT IN CONFIDENCE
II NOT TO REPRODUCE OR COPY IT
III NOT TO REVEAL OR PUBLISH IN WHOLE OR PART

APPLE COMPUTER INC.

SIZE	DRAWING NUMBER	REV.
D	051-6790	E
SCALE NONE	SHT 143 OF 154	

Preliminary
www.laptop-schematics.com

PART#	QTY	DESCRIPTION	REFERENCE DESIGNATOR(S)	CRITICAL	BOM OPTION
338S0257	1	USX2006-NU-01 CUSTOM MASK	UE400	CRITICAL	CARD_READER

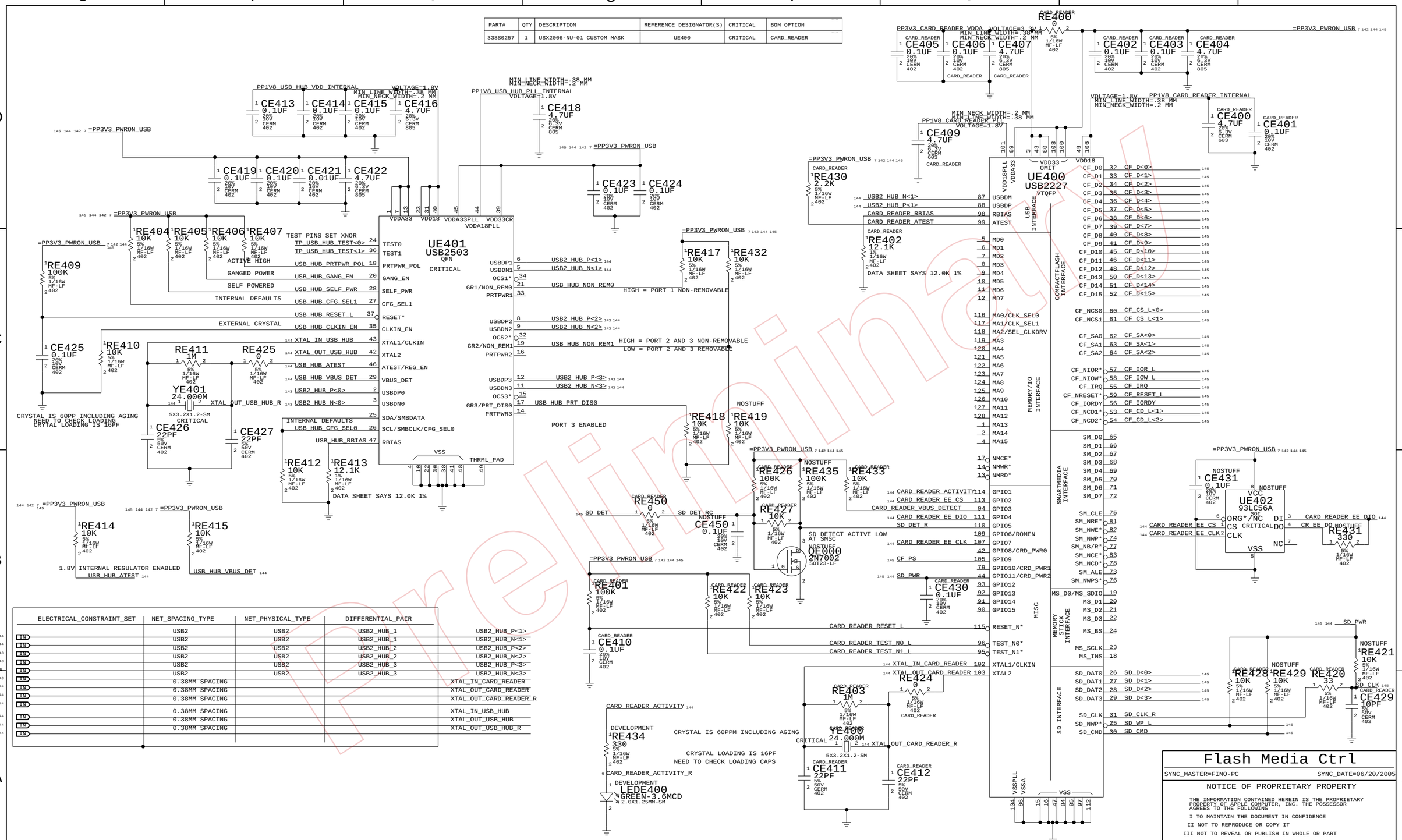

ELECTRICAL_CONSTRAINT_SET	NET_SPACING_TYPE	NET_PHYSICAL_TYPE	DIFFERENTIAL_PAIR	
	USB2	USB2	USB2_HUB_1	USB2_HUB_P<1>
	USB2	USB2	USB2_HUB_1	USB2_HUB_N<1>
	USB2	USB2	USB2_HUB_2	USB2_HUB_P<2>
	USB2	USB2	USB2_HUB_2	USB2_HUB_N<2>
	USB2	USB2	USB2_HUB_3	USB2_HUB_P<3>
	USB2	USB2	USB2_HUB_3	USB2_HUB_N<3>
	0.38MM SPACING			XTAL_IN_CARD_READER
	0.38MM SPACING			XTAL_OUT_CARD_READER
	0.38MM SPACING			XTAL_OUT_CARD_READER_R
	0.38MM SPACING			XTAL_IN_USB_HUB
	0.38MM SPACING			XTAL_OUT_USB_HUB
	0.38MM SPACING			XTAL_OUT_USB_HUB_R

www.laptop-schematics.com

IF USING THE CARD READER, MUST CHANGE THESE BOM OPTIONS TO:

PART#	QTY	DESCRIPTION	REFERENCE DESIGNATOR(S)	CRITICAL	BOM OPTION	
512S0010	1	CONN, MEDIA CARD M23	JE500	CRITICAL	CARD_READER	17_INCH_LCD
512S0012	1	CONN, MEDIA CARD M33	JE500	CRITICAL	CARD_READER	20_INCH_LCD

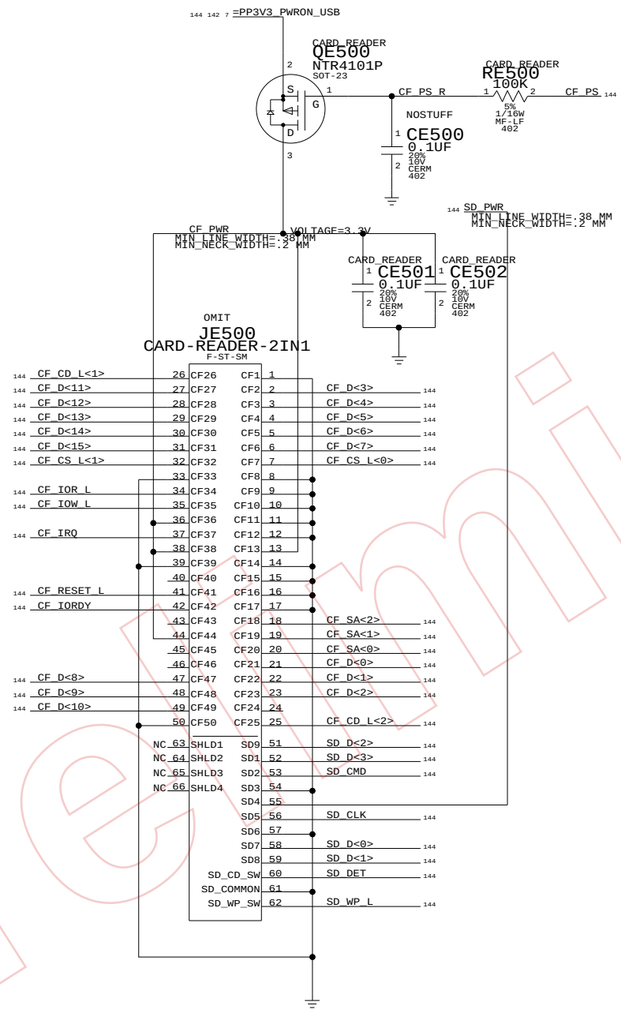

WRITE PROTECT AND CARD DETECT SWITCHES

CARD STATUS	WRITE PROTECT	WRITE ENABLE	CARD DETECT
NOT INSERTED	OPEN	OPEN	OPEN
FULLY INSERTED	OPEN	CLOSE	CLOSE

Flash Connector

SYNC_MASTER=FINO-PC SYNC_DATE=06/20/2005

NOTICE OF PROPRIETARY PROPERTY

THE INFORMATION CONTAINED HEREIN IS THE PROPRIETARY PROPERTY OF APPLE COMPUTER, INC. THE POSSESSOR AGREES TO THE FOLLOWING

I TO MAINTAIN THE DOCUMENT IN CONFIDENCE

II NOT TO REPRODUCE OR COPY IT

III NOT TO REVEAL OR PUBLISH IN WHOLE OR PART

APPLE COMPUTER INC.

SIZE	DRAWING NUMBER	REV.
D	051-6790	E

SCALE NONE SHT 145 OF 154

Preliminary

www.laptop-schematics.com

AUDIO CODEC
APPLE P/N 353S0933

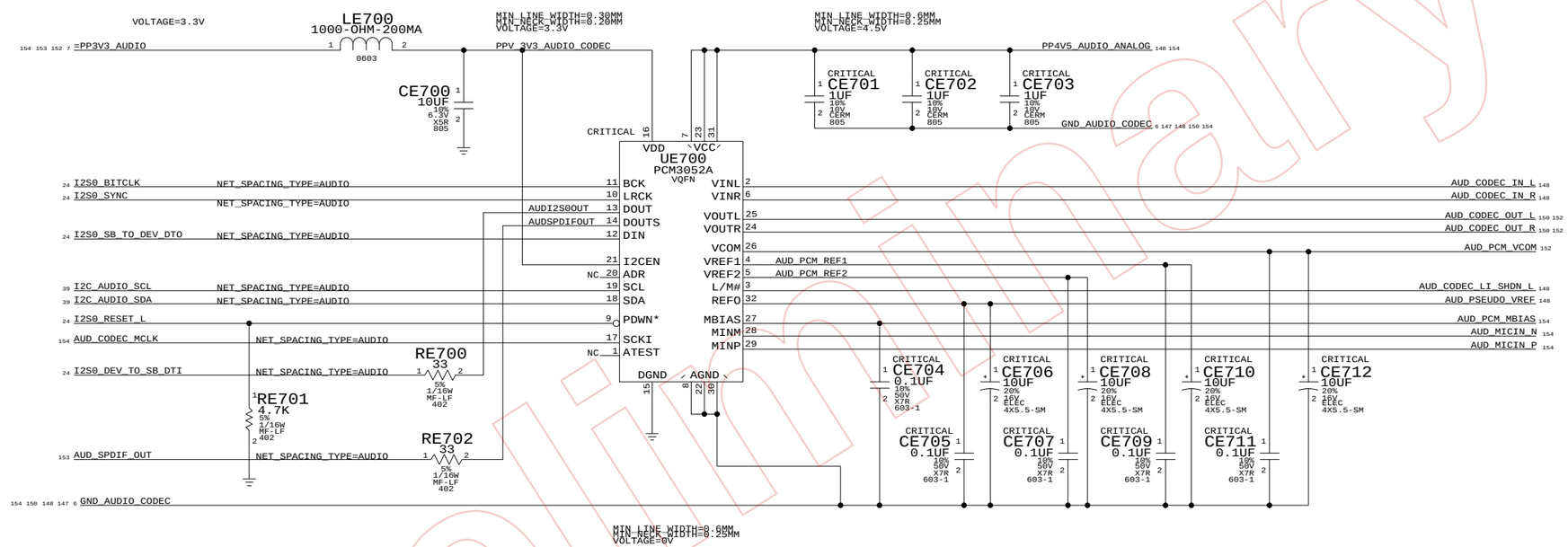

Preliminary

AUDIO: CODEC

SYNC_MASTER=FINO-SO SYNC_DATE=10/07/2005

NOTICE OF PROPRIETARY PROPERTY

THE INFORMATION CONTAINED HEREIN IS THE PROPRIETARY PROPERTY OF APPLE COMPUTER, INC. THE POSSESSOR AGREES TO THE FOLLOWING

I TO MAINTAIN THE DOCUMENT IN CONFIDENCE

II NOT TO REPRODUCE OR COPY IT

III NOT TO REVEAL OR PUBLISH IN WHOLE OR PART

APPLE COMPUTER INC.

SIZE	DRAWING NUMBER	REV.
D	051-6790	E

SCALE NONE SHT 147 OF 154

www.laptop-schematics.com

LINE IN PSEUDO-DIFFERENTIAL AMP

AV= 0.49

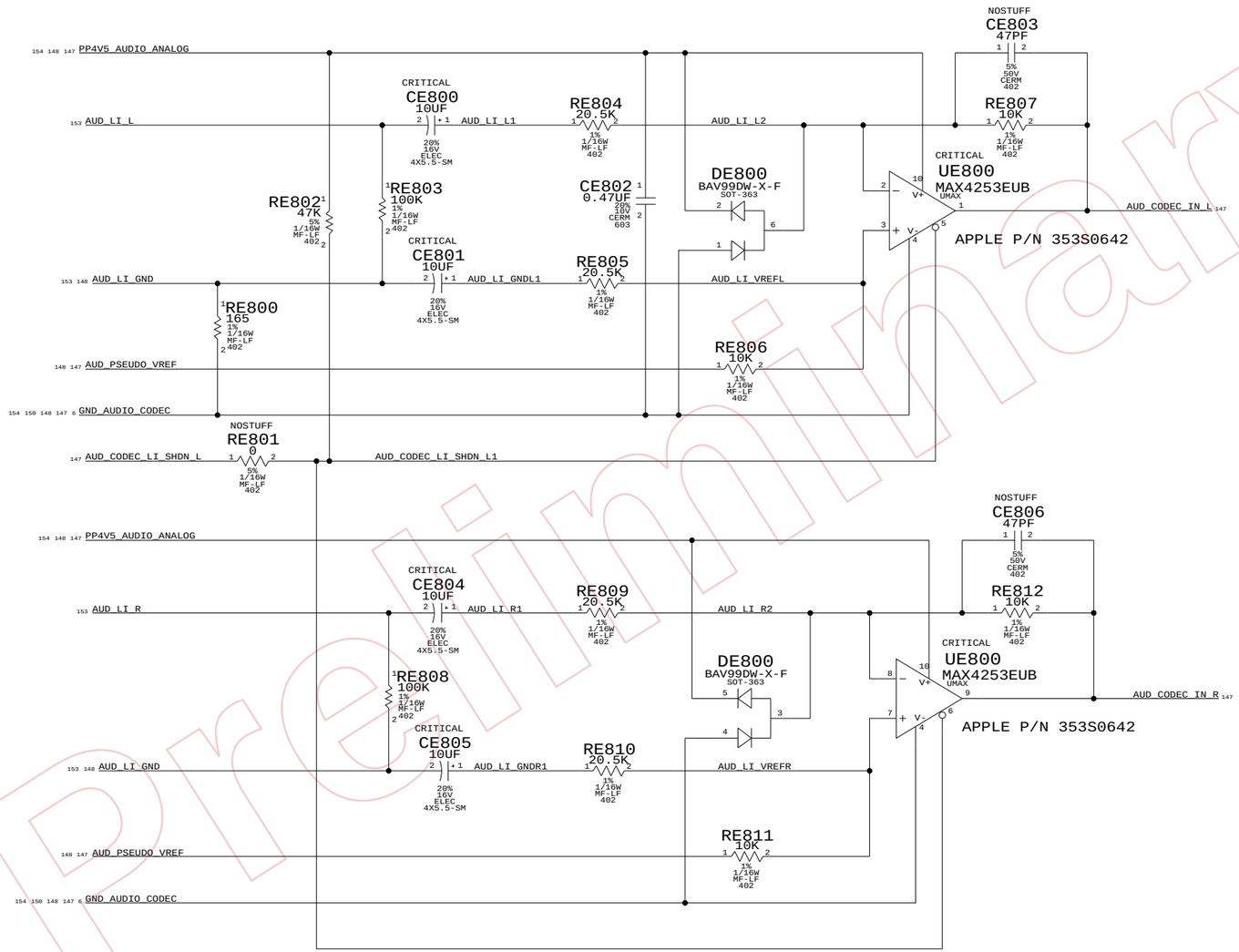

Preliminary

AUDIO: LINE INPUT AMP

SYNC_MASTER=FINO-SO SYNC_DATE=10/07/2005

NOTICE OF PROPRIETARY PROPERTY

THE INFORMATION CONTAINED HEREIN IS THE PROPRIETARY PROPERTY OF APPLE COMPUTER, INC. THE POSSESSOR AGREES TO THE FOLLOWING

I TO MAINTAIN THE DOCUMENT IN CONFIDENCE

II NOT TO REPRODUCE OR COPY IT

III NOT TO REVEAL OR PUBLISH IN WHOLE OR PART

APPLE COMPUTER INC.

SIZE	DRAWING NUMBER	REV.
D	051-6790	E
SCALE NONE	SHT 148 OF 154	

www.laptop-schematics.com

LINE OUT LOW-PASS FILTER

FC = 37 KHZ, HO = -1.4

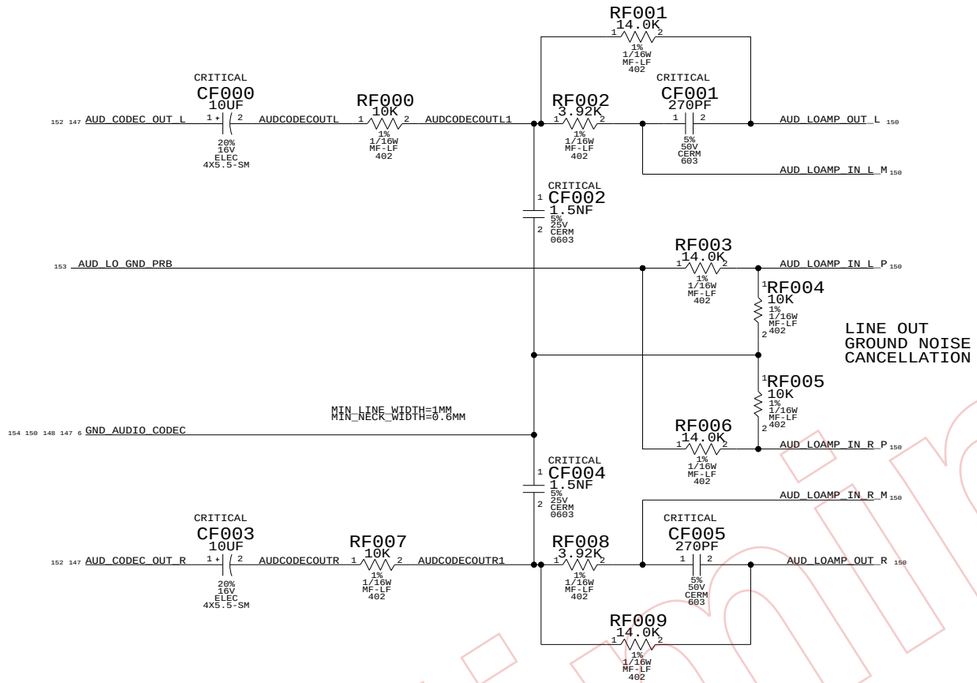

LINE OUT AMP

APPLE P/N 353S0687

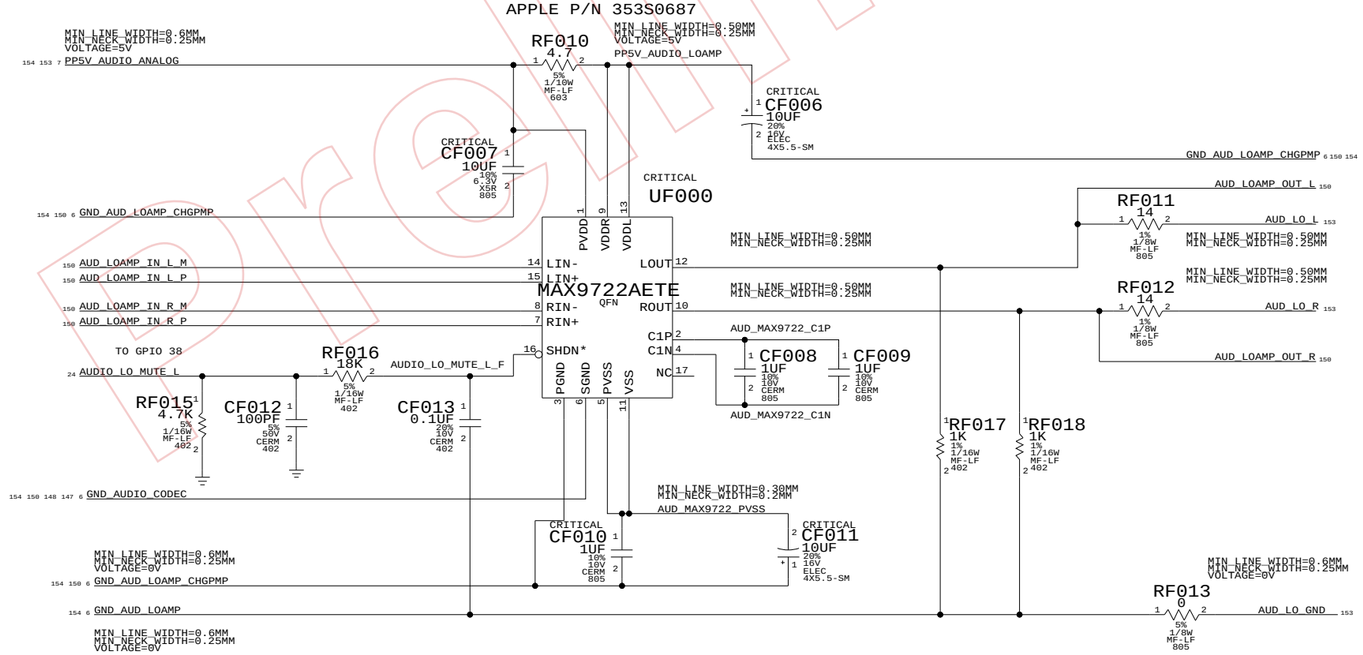

AUDIO: LINE OUT AMP

SYNC_MASTER=FINO-SO SYNC_DATE=10/07/2005

NOTICE OF PROPRIETARY PROPERTY

THE INFORMATION CONTAINED HEREIN IS THE PROPRIETARY PROPERTY OF APPLE COMPUTER, INC. THE POSSESSOR AGREES TO THE FOLLOWING

I TO MAINTAIN THE DOCUMENT IN CONFIDENCE

II NOT TO REPRODUCE OR COPY IT

III NOT TO REVEAL OR PUBLISH IN WHOLE OR PART

APPLE COMPUTER INC.

SIZE	DRAWING NUMBER	REV.
D	051-6790	E
SCALE NONE	SHT 150 OF 154	

Preliminary

www.laptop-schematics.com

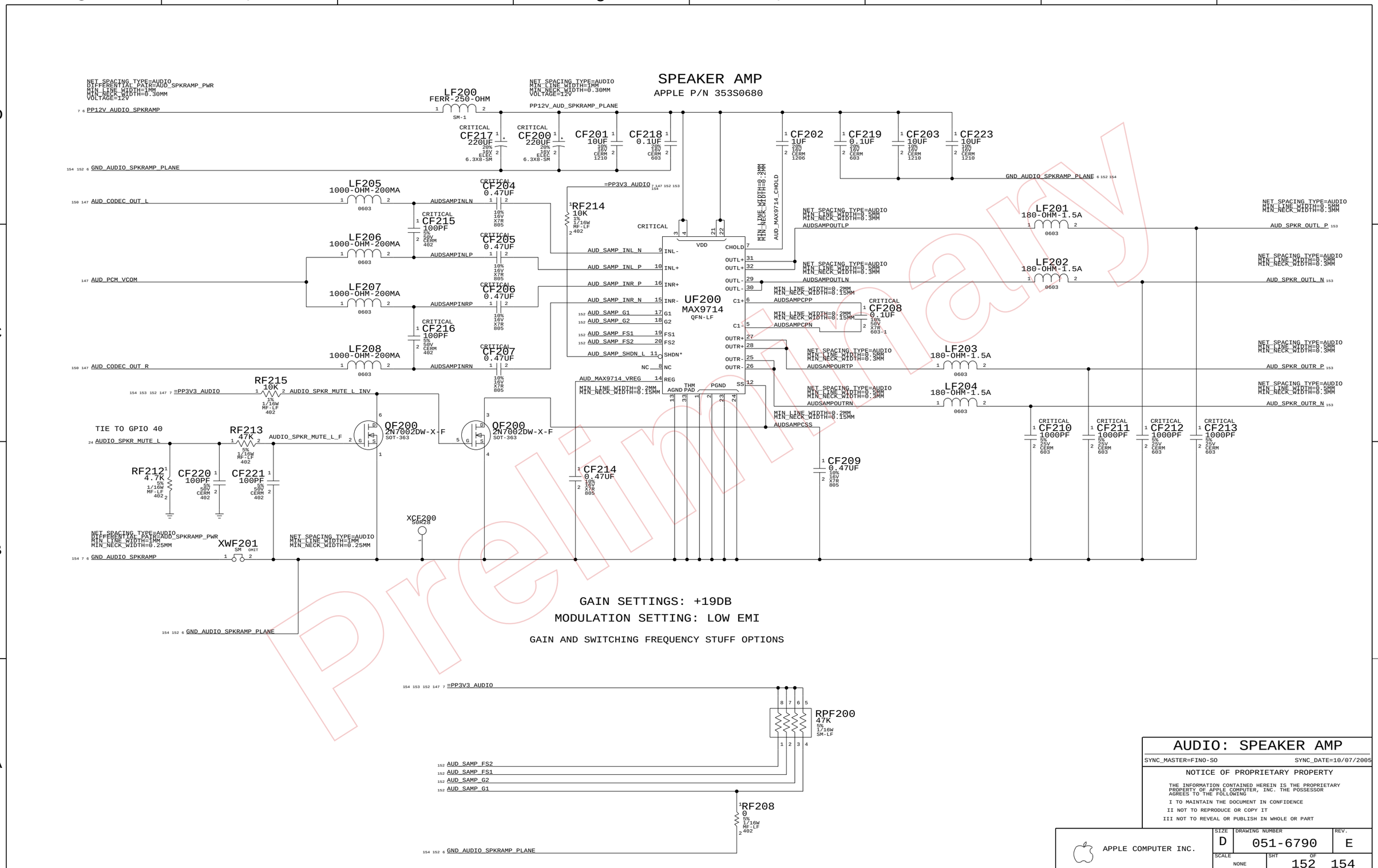

Preliminary

www.laptop-schematics.com

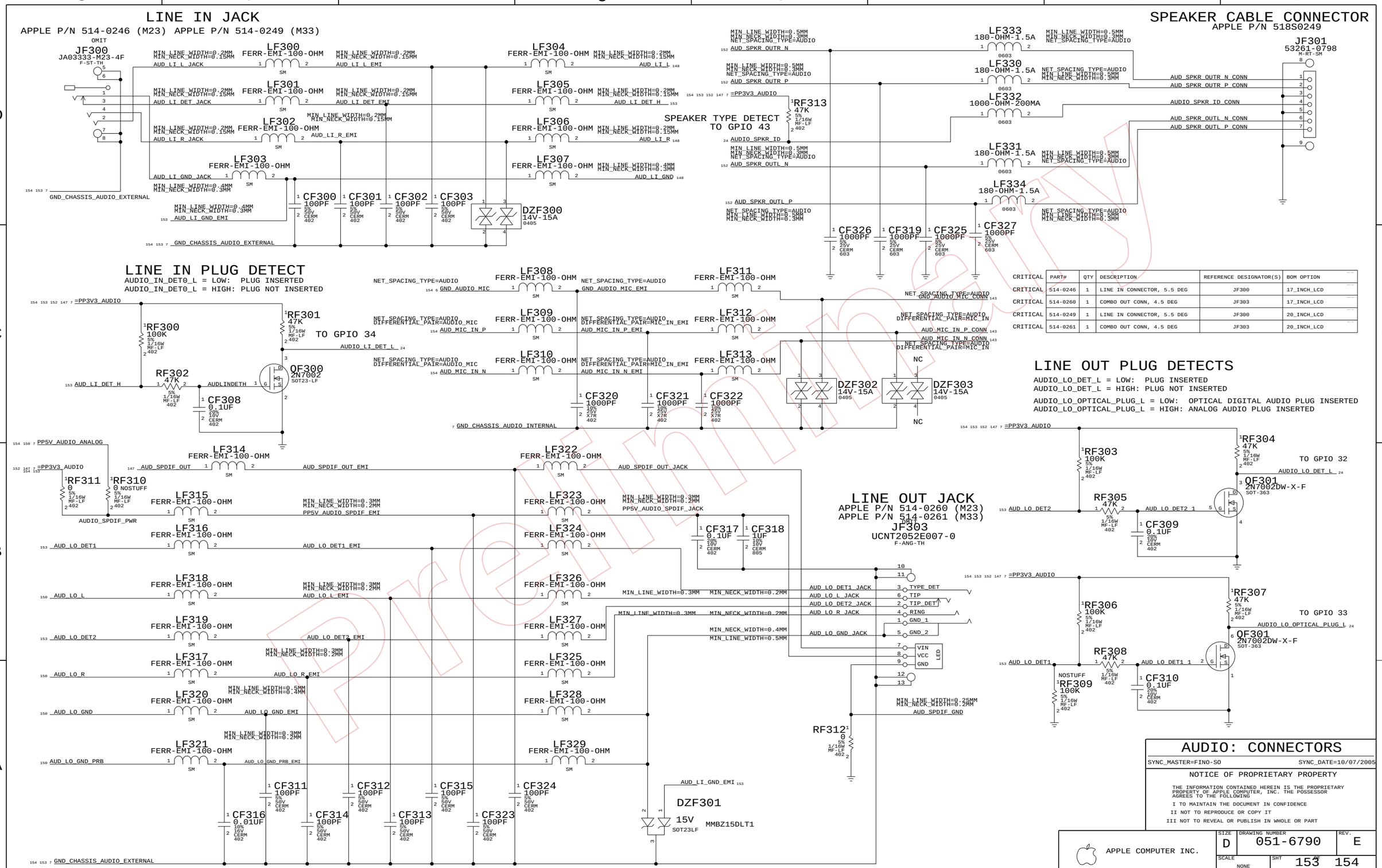

CRITICAL	PART#	QTY	DESCRIPTION	REFERENCE DESIGNATOR(S)	BOM OPTION
CRITICAL	514-0246	1	LINE IN CONNECTOR, 5.5 DEG	JF300	17_INCH_LCD
CRITICAL	514-0260	1	COMBO OUT CONN, 4.5 DEG	JF303	17_INCH_LCD
CRITICAL	514-0249	1	LINE IN CONNECTOR, 5.5 DEG	JF300	20_INCH_LCD
CRITICAL	514-0261	1	COMBO OUT CONN, 4.5 DEG	JF303	20_INCH_LCD

Preliminary
www.laptop-schematics.com

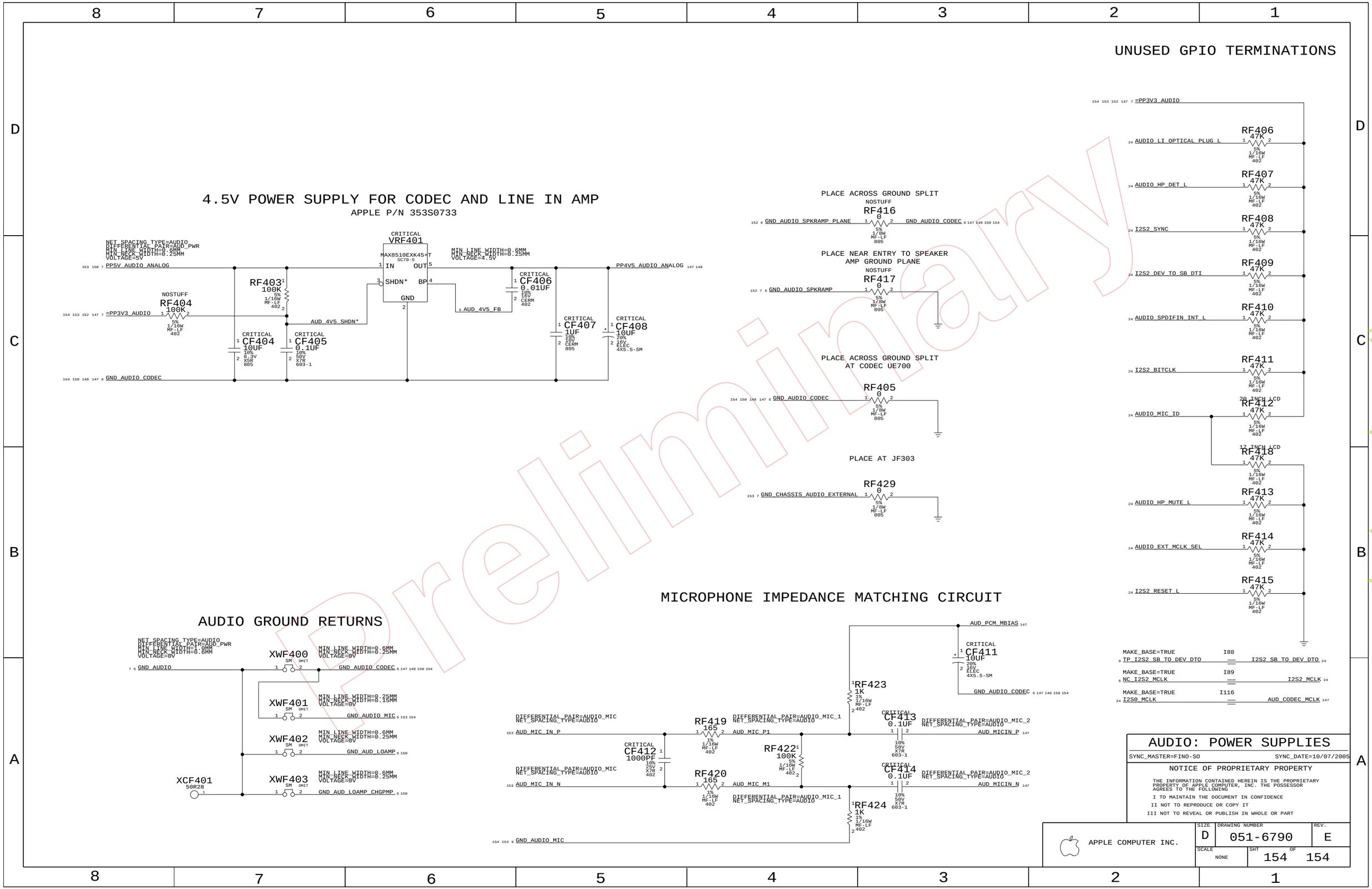
4.5V POWER SUPPLY FOR CODEC AND LINE IN AMP
APPLE P/N 353S0733
NET_SPACING_TYPE=AUDIO
DIFFERENTIAL_PAIR=AUD_PWR
MIN_LINE_WIDTH=0.6MM
MIN_NECK_WIDTH=0.25MM
VOLTAGE=5V
PP5V_AUDIO_ANALOG
=PP3V3_AUDIO
GND_AUDIO_CODEC
NOSTUFF
RF404
100K
RF403
100K
CRITICAL
VRF401
MAX8510EXK45+T
SC70-5
IN
OUT
SHDN*
BP
GND
AUD_4V5_SHDN*
AUD_4V5_FB
CF404
10UF
CF405
0.1UF
CF406
0.01UF
CF407
1UF
CF408
10UF
PP4V5_AUDIO_ANALOG
AUDIO GROUND RETURNS
GND_AUDIO
XWF400
XWF401
XWF402
XWF403
XCF401
50R28
GND_AUDIO_CODEC
GND_AUDIO_MIC
GND_AUD_LOAMP
GND_AUD_LOAMP_CHGPMP
PLACE ACROSS GROUND SPLIT
RF416
GND_AUDIO_SPKRAMP_PLANE
PLACE NEAR ENTRY TO SPEAKER
AMP GROUND PLANE
RF417
GND_AUDIO_SPKRAMP
PLACE ACROSS GROUND SPLIT
AT CODEC UE700
RF405
GND_AUDIO_CODEC
PLACE AT JF303
RF429
GND_CHASSIS_AUDIO_EXTERNAL
MICROPHONE IMPEDANCE MATCHING CIRCUIT
AUD_PCM_MBIAS
CF411
10UF
RF423
1K
GND_AUDIO_CODEC
DIFFERENTIAL_PAIR=AUDIO_MIC
NET_SPACING_TYPE=AUDIO
AUD_MIC_IN_P
AUD_MIC_IN_N
RF419
165
RF420
165
CF412
1000PF
AUD_MIC_P1
AUD_MIC_M1
DIFFERENTIAL_PAIR=AUDIO_MIC_1
RF422
100K
CF413
0.1UF
CF414
0.1UF
AUD_MICIN_P
AUD_MICIN_N
DIFFERENTIAL_PAIR=AUDIO_MIC_2
RF424
1K
GND_AUDIO_MIC
UNUSED GPIO TERMINATIONS
=PP3V3_AUDIO
AUDIO_LI_OPTICAL_PLUG_L
AUDIO_HP_DET_L
I2S2_SYNC
I2S2_DEV_TO_SB_DTI
AUDIO_SPDIFIN_INT_L
I2S2_BITCLK
20 INCH LCD
AUDIO_MIC_ID
17 INCH LCD
AUDIO_HP_MUTE_L
AUDIO_EXT_MCLK_SEL
I2S2_RESET_L
RF406
RF407
RF408
RF409
RF410
RF411
RF412
RF413
RF414
RF415
MAKE_BASE=TRUE
I88
TP_I2S2_SB_TO_DEV_DTO
I2S2_SB_TO_DEV_DTO
I89
NC_I2S2_MCLK
I2S2_MCLK
I116
I2S0_MCLK
AUD_CODEC_MCLK
AUDIO: POWER SUPPLIES
SYNC_MASTER=FINO-SO
SYNC_DATE=10/07/2005
NOTICE OF PROPRIETARY PROPERTY
THE INFORMATION CONTAINED HEREIN IS THE PROPRIETARY PROPERTY OF APPLE COMPUTER, INC. THE POSSESSOR AGREES TO THE FOLLOWING
I TO MAINTAIN THE DOCUMENT IN CONFIDENCE
II NOT TO REPRODUCE OR COPY IT
III NOT TO REVEAL OR PUBLISH IN WHOLE OR PART
APPLE COMPUTER INC.
SIZE
D
DRAWING NUMBER
051-6790
REV.
E
SCALE
NONE
SHT
154
OF
154
Preliminary
www.laptop-schematics.com